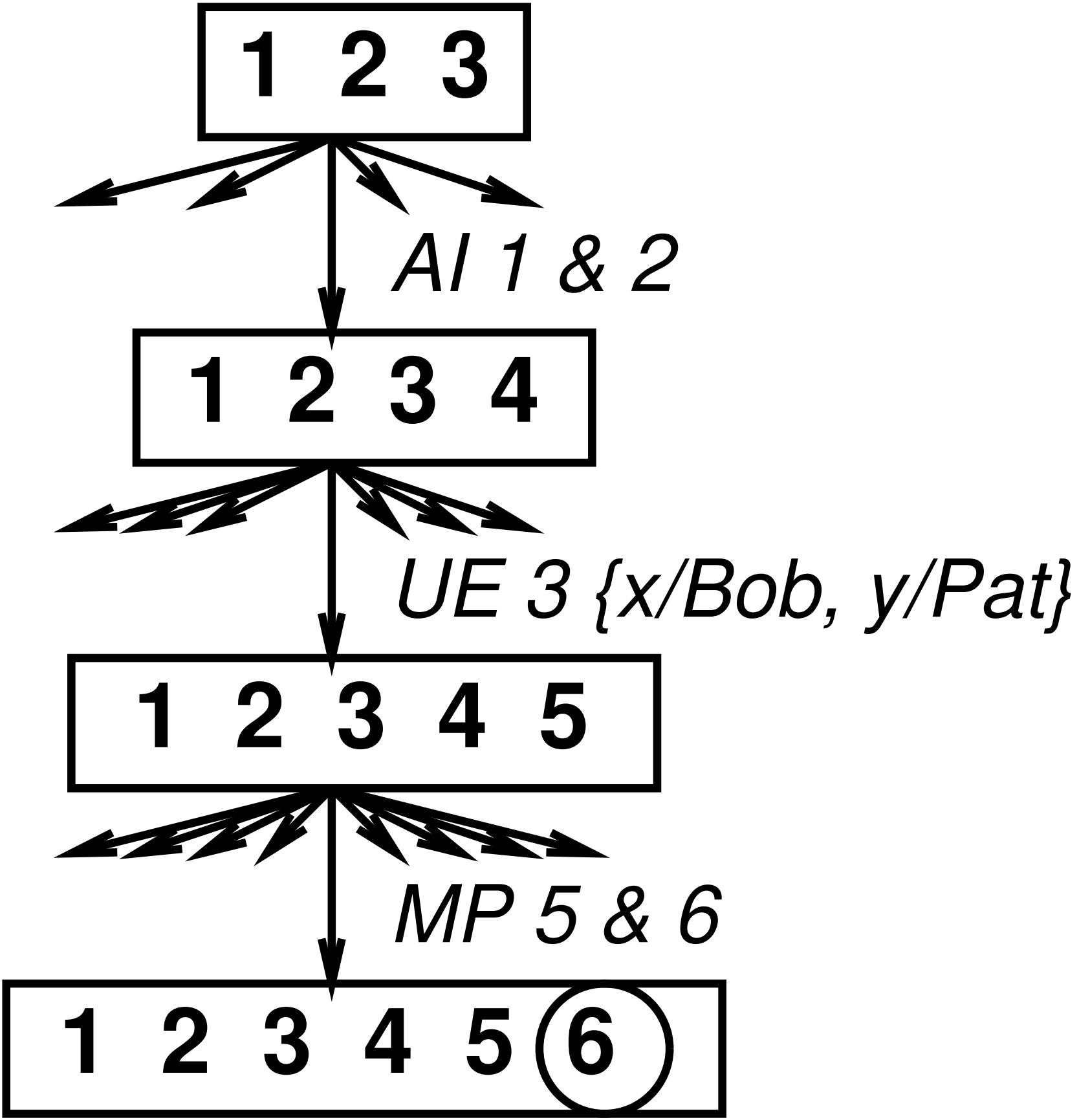
1 2 3
AI 1 & 2
1 2 3 4
UE 3 {x/Bob, y/Pat}
1 2 3 4 5
MP 5 & 6
1 2 3 4 5 6