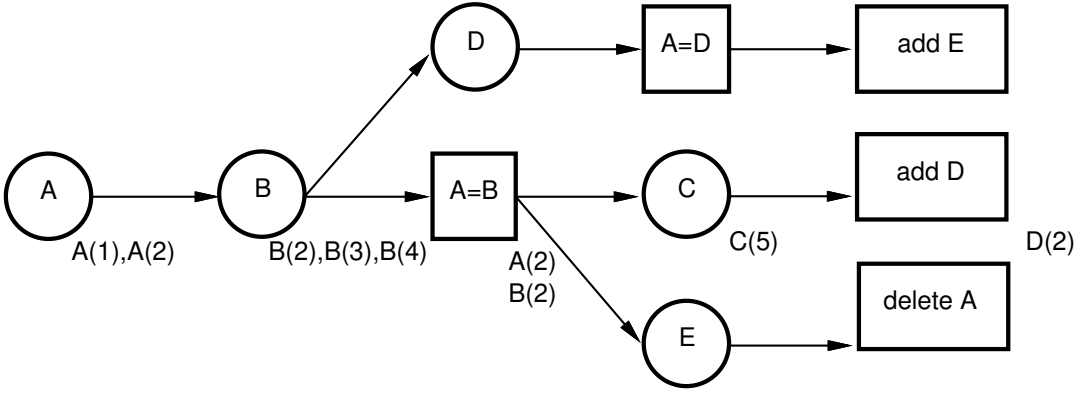
A
A(1),A(2)
B
B(2),B(3),B(4)
D
A=B
A(2)
B(2)
A=D
C
C(5)
E
add E
add D
D(2)
delete A