CS61C
Anatomy of I/O Devices: Networks

Lecture 14

March 5, 1999

Dave Patterson
(http.cs.berkeley.edu/~patterson)

www-inst.eecs.berkeley.edu/~cs61c/schedule.html

Review 1/2

- Operating System started as shared I/O library
  - Support for OS abstraction: Kernel/User bit, stacked KU bits, `syscall`
  - MIPS follows coprocessor abstraction to add resources, instructions for OS
- Interrupt control: Interrupt Enable bit, stacked IE bits, Interrupt Priority Levels, Interrupt Mask
  - Re-entrant via restricting int. to higher priority
- DMA to accelerate data movement

Outline

- Buses
- Why Networks?
- A Simple Example: Derive Network Basics
- Protocol, Ethernet
- Administrivia, “Computers in the News”
- Internetworking, Protocol Suites, TCP/IP
- Performance Pitfalls
- Conclusion

Recall : 5 components of any Computer

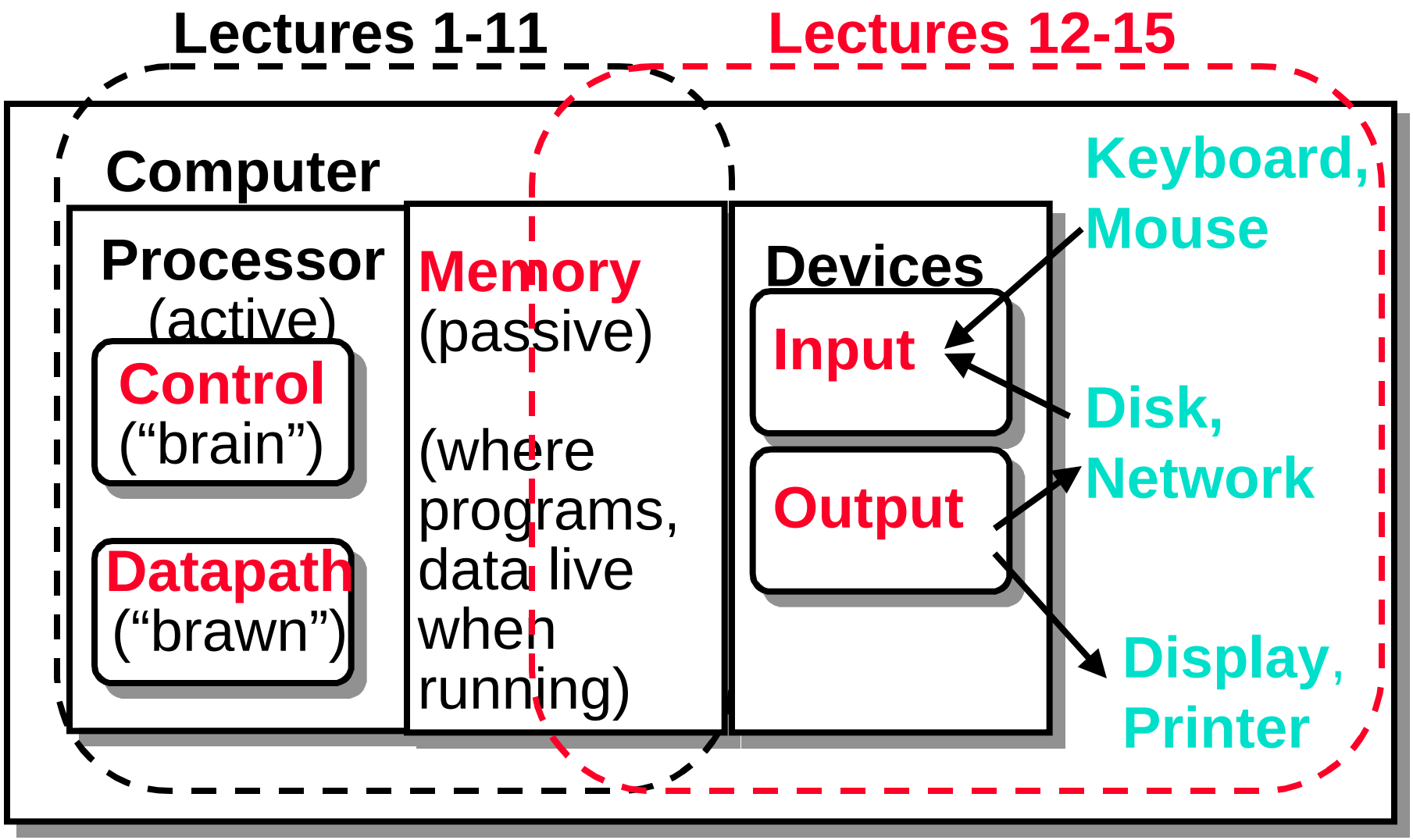

Connecting to Networks (and Other I/O)

- **Bus** - shared medium of communication that can connect to many devices
- Hierarchy of Buses in a PC

Buses in a PC

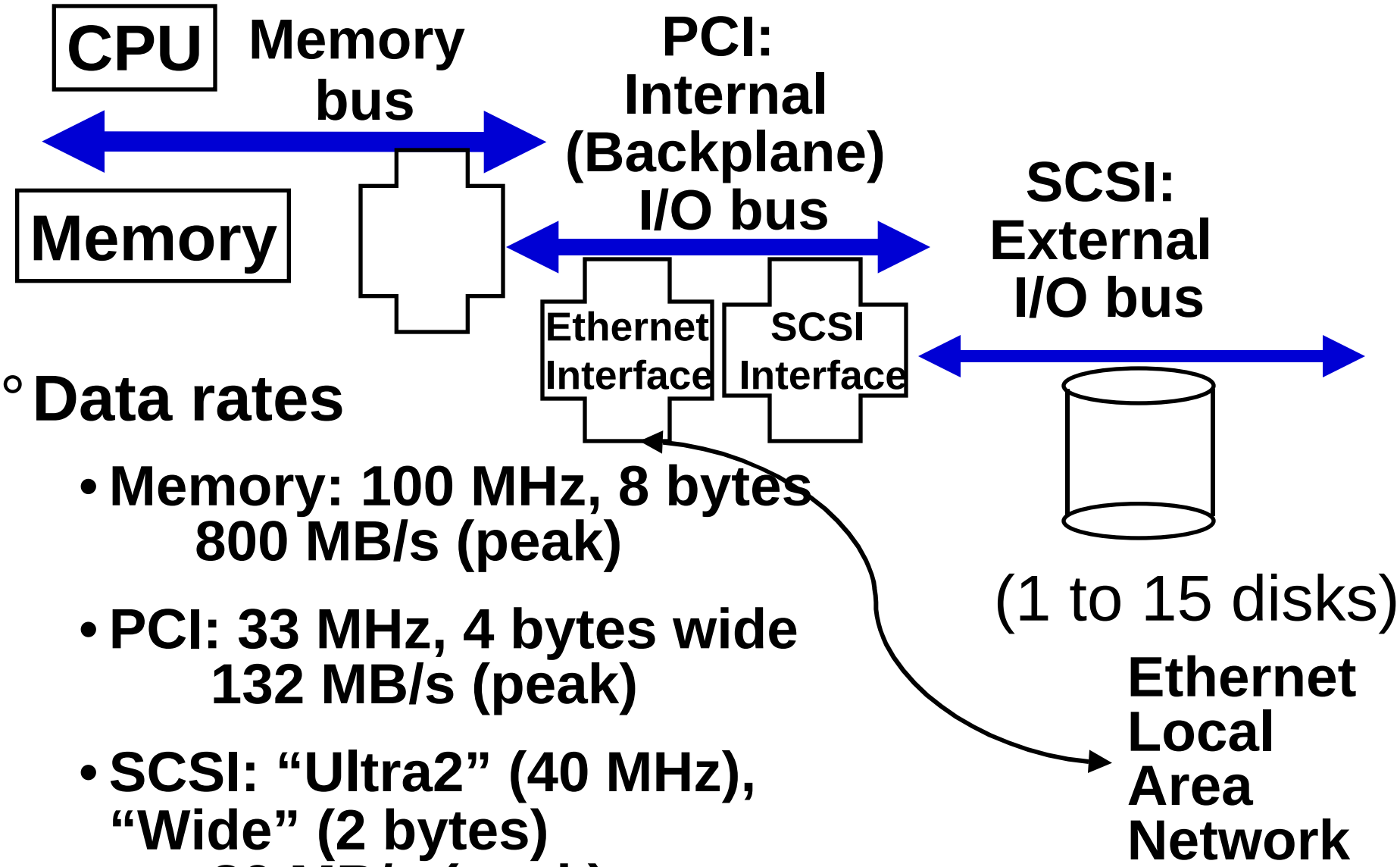

- Data rates
  - Memory: 100 MHz, 8 bytes
    800 MB/s (peak)
  - PCI: 33 MHz, 4 bytes wide
    132 MB/s (peak)
  - SCSI: "Ultra2" (40 MHz), "Wide" (2 bytes)
    80 MB/s (peak)

Why Networks?

- Originally sharing I/O devices between computers
  (e.g., printers)
- Then Communicating between computers
  (e.g, file transfer protocol)
- Then Communicating between people
  (e.g., email)
- Then Communicating between networks of computers
  Internet, WWW

Types of Networks

- Local Area Network (Ethernet)
  - Inside a building: Up to 1 km
  - (peak) Data Rate:
    10 Mbits/sec, 100 Mbits/sec,1000 Mbits/sec
  - Run, installed by network administrators
- Wide Area Network
  - Across a continent (10km to 10000 km)
  - (peak) Data Rate:
    1.5 Mbits/sec to 2500 Mbits/sec
  - Run, installed by telephone companies

ABCs of Networks: 2 Computers

- Starting Point: Send bits between 2 computers

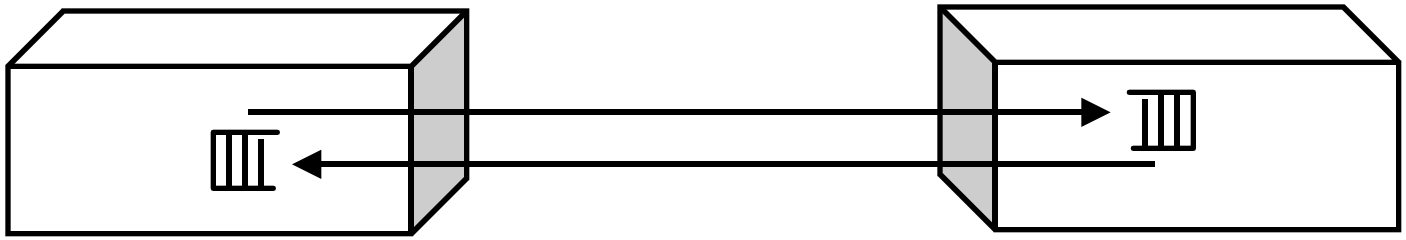

- Queue (First In First Out) on each end
- Can send both ways ("Full Duplex")
- Information sent called a "message"
  - Note: Messages also called packets

A Simple Example: 2 Computers

- What is Message Format?
  - (Similar in idea to Instruction Format)
  - Fixed size? Number bits?

Request/
Response

1 bit 32 bits

0: Please send data from address in your memory
1: Packet contains data corresponding to request

- Header(Trailer): information to deliver message
- Payload: data in message (1 word above)

Questions About Simple Example

- What if more than 2 computers want to communicate?
  - Need computer "address field" in packet to know which computer should receive it (destination), and to which computer it came from for reply (source)

Req./ Resp.	Dest.	Source	
	Net ID	Net ID	Address/Data
1 bit	5 bits	5 bits	32 bits
	Header		Payload

Questions About Simple Example

- What if message is garbled in transit?
  - Add redundant information that is checked when message arrives to be sure it is OK
  - 8-bit sum of other bytes: called "Check sum"; upon arrival compare check sum to sum of rest of information in message

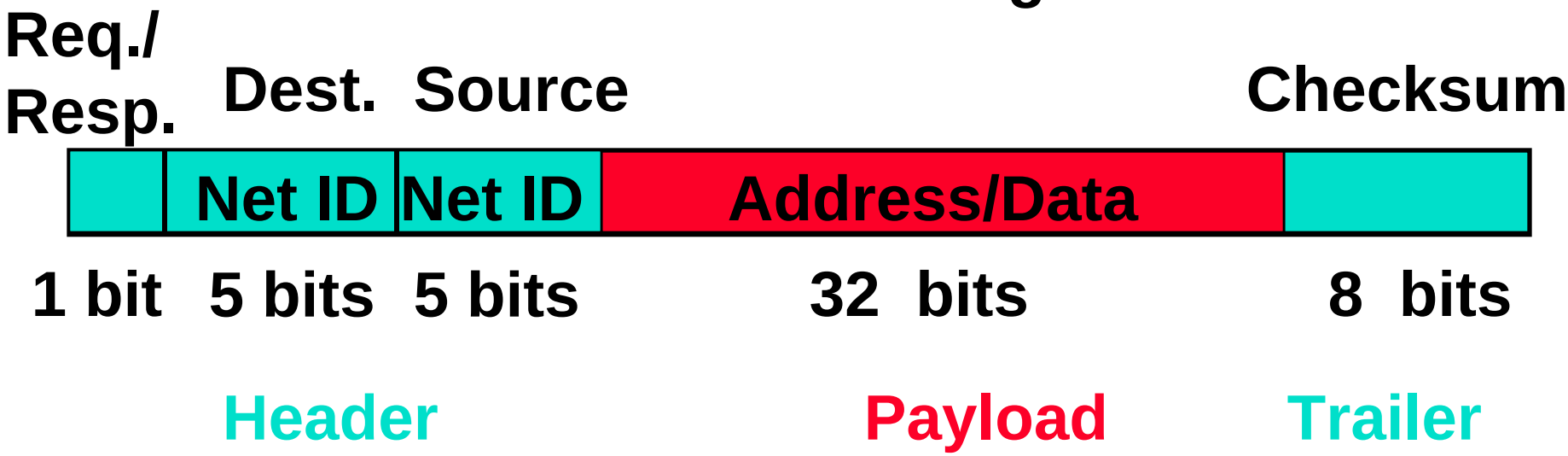

Questions About Simple Example

- What if message never arrives?
  - If tell sender it has arrived (and tell receiver reply has arrived), can resend upon failure
  - Don't discard message until get "ACK"; (Also, if check sum fails, don't send ACK)

Req./ Resp.	Dest.	Source		
	Net ID	Net ID	Address/Data	Check
2 bits	5 bits	5 bits	32 bits	8 bits

00: Request—Please send data from Address

01: Reply—Message contains data corresponding to request

10: Acknowledge (ACK) request

11: Acknowledge (ACK) reply

Observations About Simple Example

- Simple questions such as those above lead to more complex procedures to send/receive message and more complex message formats
- Protocol: algorithm for properly sending and receiving messages (packets)

Ethernet Packet Format

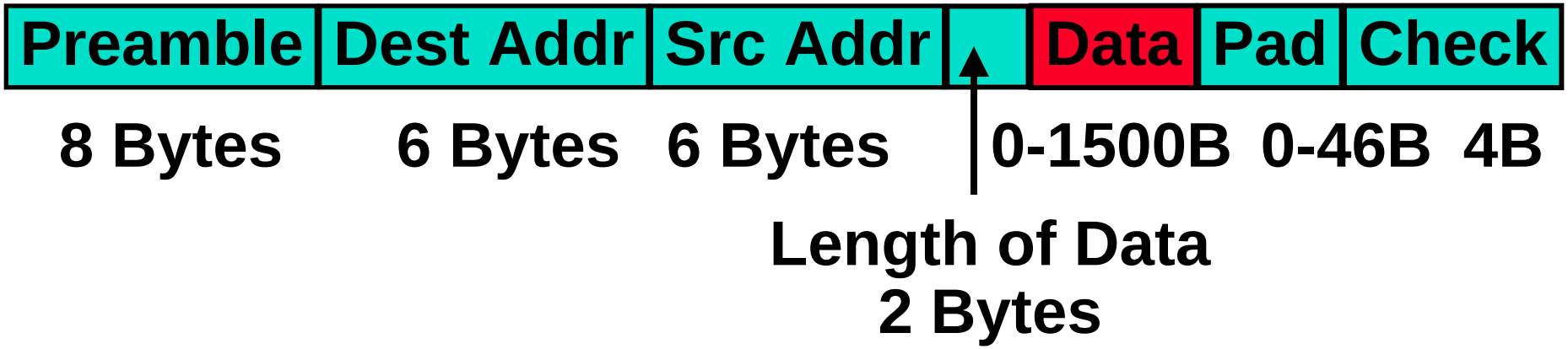

- Preamble to recognize beginning of packet
- Unique Address per Ethernet Network Interface Card so can just plug in & use
- Pad ensures minimum packet is 64 bytes
  - Easier to find packet on the wire
- Header+ Trailer: 24B + Pad

Software Protocol to Send and Receive

- SW Send steps
  - 1: Application copies data to OS buffer
  - 2: OS calculates checksum, starts timer
  - 3: OS sends data to network interface HW and says start
- SW Receive steps
  - 3: OS copies data from network interface HW to OS buffer
  - 2: OS calculates checksum, if OK, send ACK; if not, delete message (sender resends when timer expires)
  - 1: If OK, OS copies data to user address space, & signals application to continue

Administrivia 1/2

- 6th homework: Due 3/10 7PM
  - Exercises 8.3, 8.29 (skip challenge), Ap A.3
- 4th Project: Friday 3/12 7PM (absolute latest: 3/13 8AM)
- Readings: Cache Memory 7.1, 7.2
- Upcoming events
  - Midterm Review Sunday 3/14 2PM, 1 Pimentel
  - Midterm on Wed. 3/17 5pm-8PM, 1 Pimentel
  - No discussion sections 3/18, 3/19
  - Friday before Break 3/19: video tape by Gordon Moore, "Nanometers and Gigabucks"

Administrivia 2/2

- Copy of Slides for Midterm?
  - 150 pages total, 4/page double sided
  - Purchase at Copy Central
  - Is this worth doing?
- Printing Problems for lectures?
  - 20% don’t have access to printer at home
  - Could ask my assistant to make, say, 50 copies of slides back-to-back and place them in 271 Soda (or somewhere) by 10AM day of lecture
  - Is this worth doing?

“Computers in the News”

- “A Growing Compatibility Issue in the Digital Age: Computers and Their Users' Privacy”, NYT, 3/2/99
  - “... an imminent privacy threat or simply part of the foundation of advanced computer systems”
  - “Privacy groups argue fiercely that the merger of computers and the Internet has brought the specter of a new surveillance society (anything)”
  - “...network designers argue that identity information is a vital aspect of modern security design because it is necessary to authenticate an individual in a network, thereby preventing fraud or intrusion”
  - “all devices connected to networks require identification simply to function correctly... [for 20 years a] requirement for any computer connected to an Ethernet”

Protocol for Networks of Networks?

- Internetworking: allows computers on independent and incompatible networks to communicate reliably and efficiently;
  - Enabling technologies: SW standards that allow reliable communications without reliable networks
  - Hierarchy of SW layers, giving each layer responsibility for portion of overall communications task, called protocol families or protocol suites
- Abstraction to cope with complexity of communication vs. Abstraction for complexity of computation

Protocol for Network of Networks

- Transmission Control Protocol/Internet Protocol (TCP/IP)
  - This protocol family is the basis of the Internet, a WAN protocol
  - IP makes best effort to deliver
  - TCP guarantees delivery
  - TCP/IP so popular it is used even when communicating locally: even across homogeneous LAN

FTP From Stanford to Berkeley

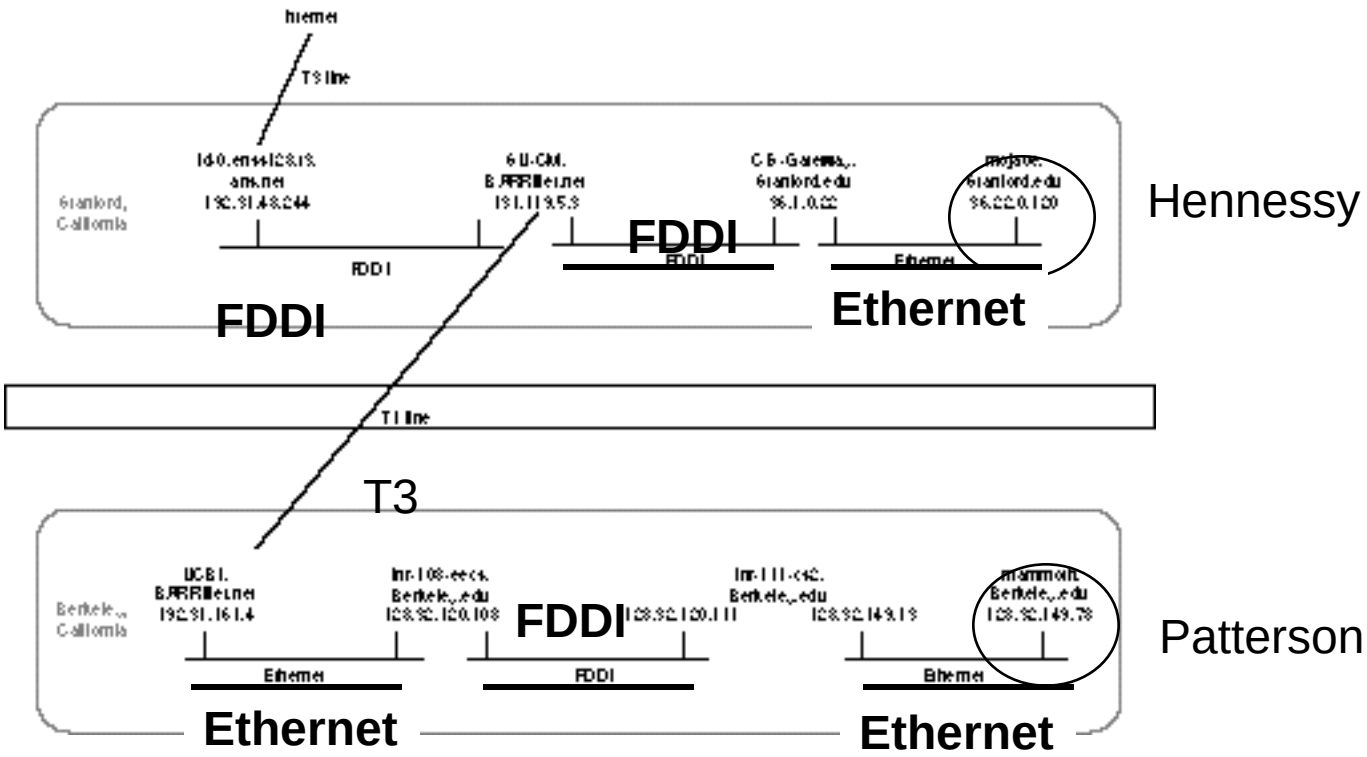

- BARRNet is WAN for Bay Area
  - T3 is 45 Mbit/s leased line (WAN); FDDI is 100 Mbit/s LAN
- IP sets up connection, TCP sends file

Protocol Family Concept

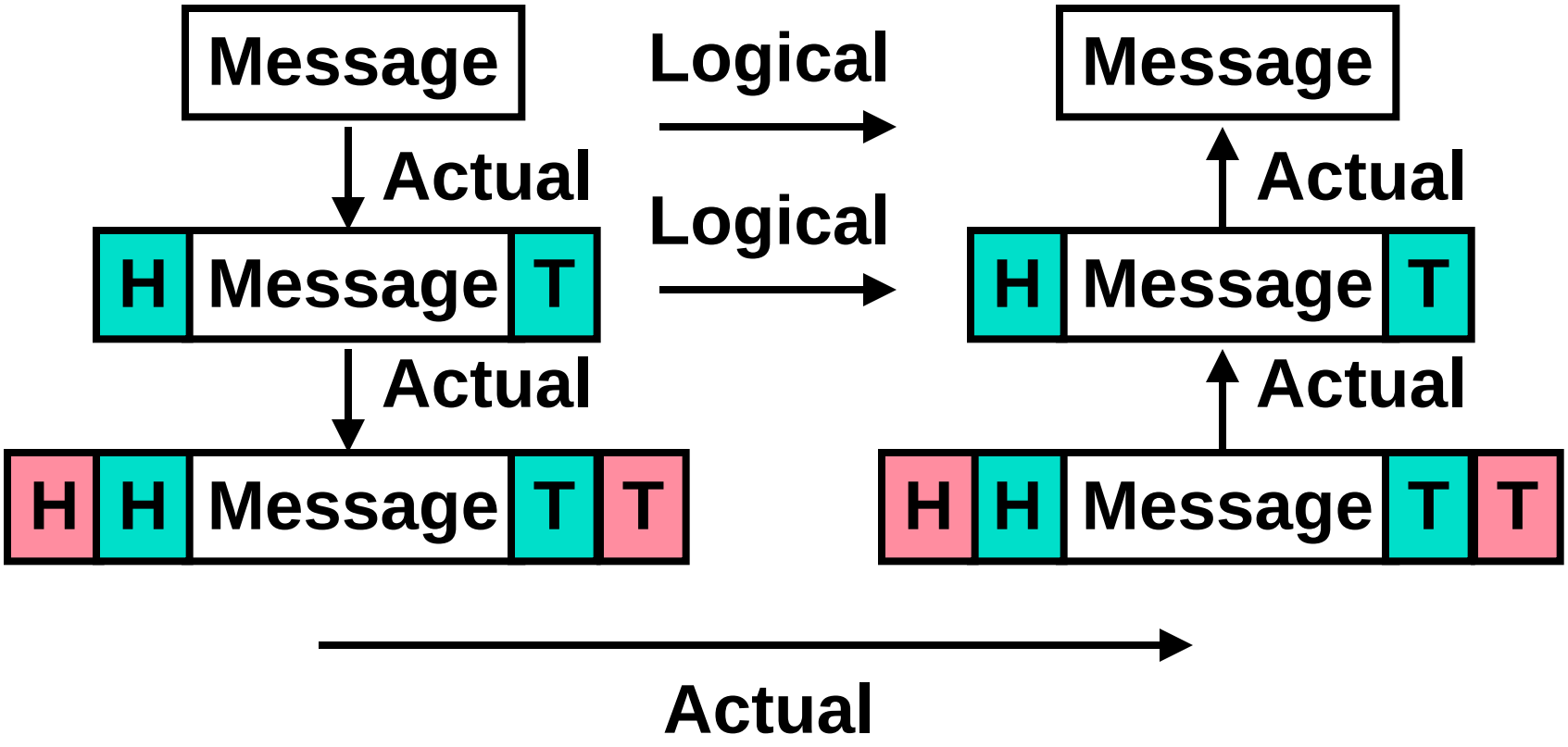

Protocol Family Concept

- Key to protocol families is that communication occurs logically at the same level of the protocol, called peer-to-peer, but is implemented via services at the lower level
  - Danger is each level lower performance if family is implemented as hierarchy (e.g., multiple check sums)

TCP/IP packet, Ethernet packet, protocols

- Application sends message
- TCP breaks into 64KB segments, adds 20B header
- IP adds 20B header, sends to network
- If Ethernet, broken into 1500B packets with headers, trailers (24B)
- All Headers, trailers have length field, destination, ...

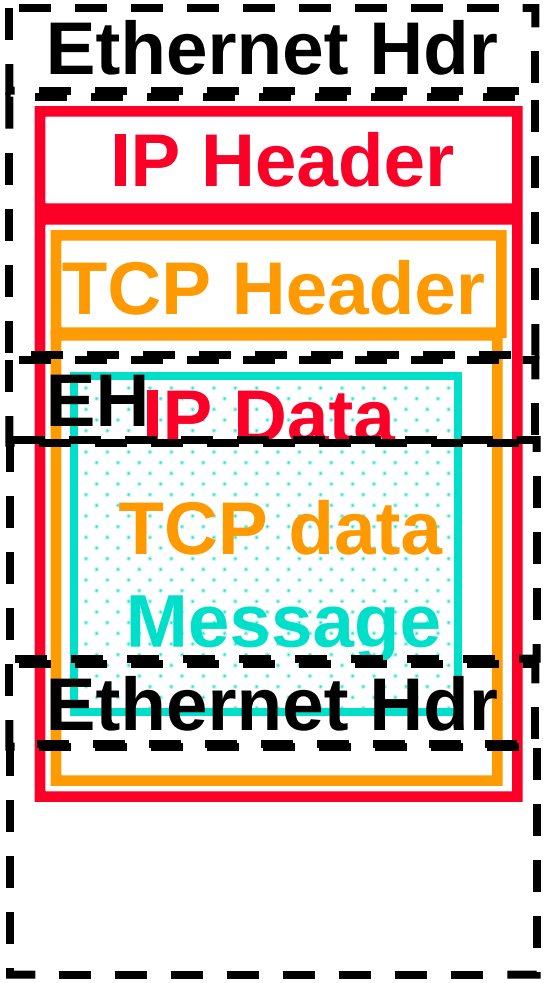

Shared vs. Switched Based Networks

- Shared Media vs. Switched: pairs communicate at same time: "point-to-point" connections
- Aggregate BW in switched network is many times shared
  - point-to-point faster since no arbitration, simpler interface

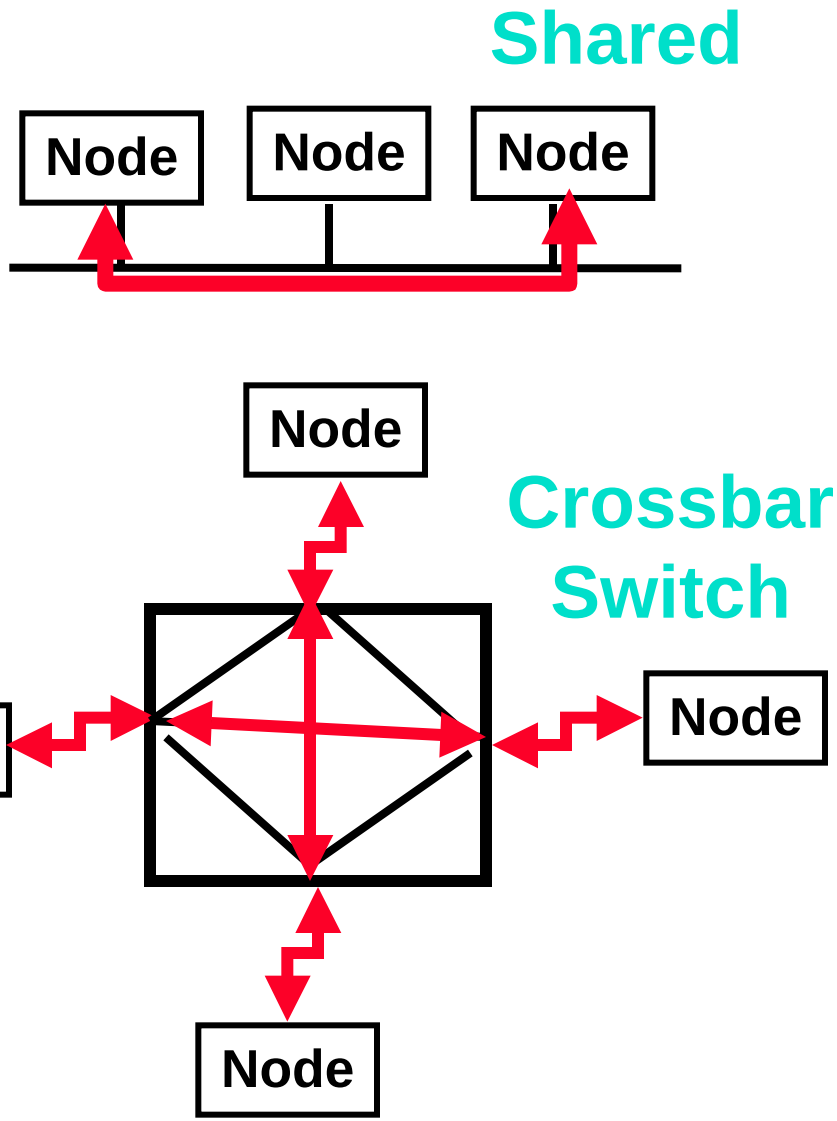

Example of Network Performance

- Compare Ethernet, ATM sending a message with a 5 MB payload
- Time to send message: Overhead + Size/Data Rate
- Ethernet Overhead: 500 microseconds
  - BW is 1.25 Mbyte/sec
- ATM Overhead: 600 microseconds
  - BW is 10 Mbyte/sec
- Transmission time = Overhead + Size/(Data Rate)

Example of Network Performance

- Compare Ethernet (10 Mbit/sec), ATM (800 Mbit/sec) sending a message with a 250 Byte payload
- Time to send message: Overhead + Size/Data Rate
- Ethernet Overhead: 460 microseconds
  - BW is 1.25 Mbyte/sec
  - Time = 460 + 250/1.25 = 660 usecs
- ATM Overhead: 630 microseconds
  - BW is 10 Mbyte/sec
  - Time = 630 + 250/10 = 655 microseconds

Limits to Performance of Networks

- Layers of protocol
- Processor speed for protocol processing
- Memory speed for transferring messages
- Bus speed for connecting to computer
- Sharing of Network by multiple computers

I/O Pitfall: Relying on Peak Data Rates

- Using the peak transfer rate of a portion of the I/O system to make performance projections or performance comparisons
- Peak bandwidth measurements often based on unrealistic assumptions about system or unattainable because of other system limitations
  - In example, Peak Bandwidth FDDI vs. 10 Mbit Ethernet = 10:1, but delivered BW ratio (due to software overhead) is 1.01:1
  - Peak PCI BW is 132 MByte/sec, but combined with memory often < 80 MB/s

Network Media (if time)

Twisted Pair:

Copper, 1mm think, twisted to avoid attenna effect (telephone)

Coaxial Cable:

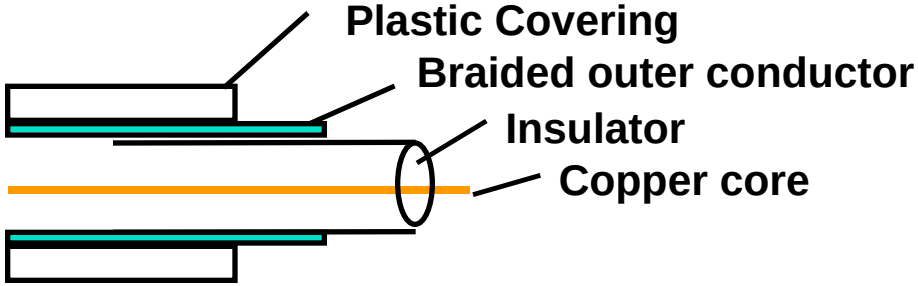

Used by cable companies: high BW, good noise immunity

Fiber Optics

Transmitter
- L.E.D
- Laser Diode

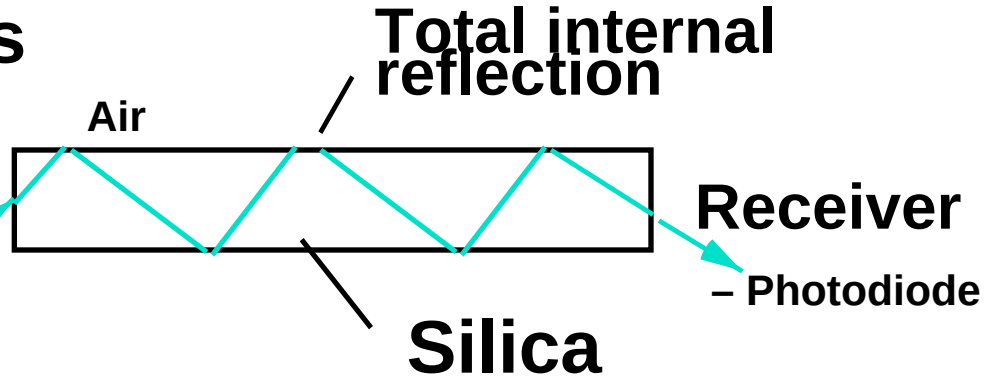

Light: 3 parts are cable, light source, light detector

“And in Conclusion..” 1/1

- Protocol suites allow heterogeneous networking
  - Another use of principle of abstraction
  - Protocols operation in presence of failures
  - Standardization key for LAN, WAN
- Integrated circuit revolutionizing network switches as well as processors
  - Switch just a specialized computer
- High bandwidth networks with slow SW overheads don’t deliver their promise
- Next: Anatomy of disks, RAID