Lecture 6: Instruction Level Parallelism 2: Loop-Level parallelism extraction, Data Flow, Explicit Register Renaming.

Prof. John Kubiatowicz
Computer Science 252
Fall 1998

Review: Dynamic hardware techniques for out-of-order execution

- HW exploitation of ILP
  - Works when can't know dependence at compile time.
  - Code for one machine runs well on another
- Scoreboard (ala CDC 6600 in 1963)
  - Centralized control structure
  - No register renaming, no forwarding
  - Pipeline stalls for WAR and WAW hazards.
  - Are these fundamental limitations??? (No)
- Reservation stations (ala IBM 360/91 in 1966)
  - Distributed control structures
  - Implicit renaming of registers (dispatched pointers)
  - WAR and WAW hazards eliminated by register renaming
  - Results broadcast to all reservation stations for RAW

Tomasulo Organization

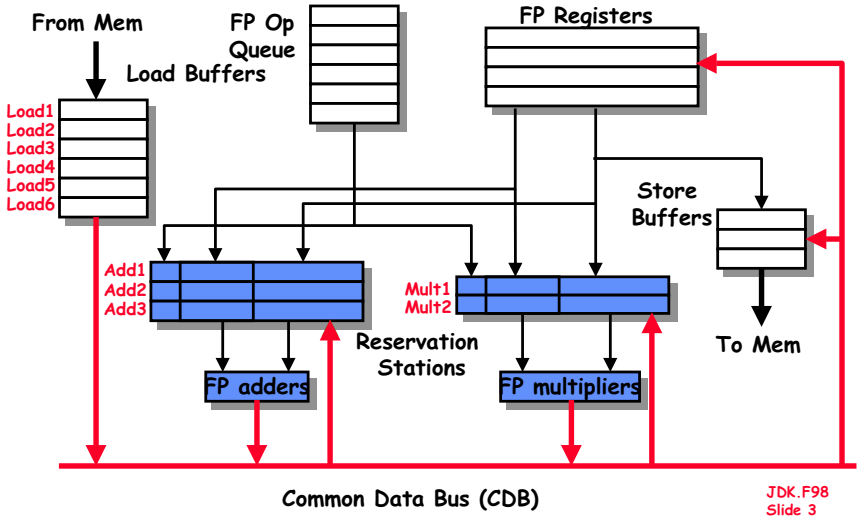

Three Stages of Tomasulo Algorithm

1. Issue—get instruction from FP Op Queue

   If reservation station free (no structural hazard), control issues instr & sends operands (renames registers).

2. Execution—operate on operands (EX)

   When both operands ready then execute; if not ready, watch Common Data Bus for result

3. Write result—finish execution (WB)

   Write on Common Data Bus to all awaiting units; mark reservation station available

- Normal data bus: data + destination ("go to" bus)
- Common data bus: data + source ("come from" bus)
  - 64 bits of data + 4 bits of Functional Unit source address
  - Write if matches expected Functional Unit (produces result)
  - Does the broadcast

Tomasulo Loop Example

```
Loop: LD      F0   0    R1
      MULTD   F4   F0   F2
      SD      F4   0    R1
      SUBI    R1   R1   #8
      BNEZ    R1   Loop
```

- Assume Multiply takes 4 clocks
- Assume first load takes 8 clocks (cache miss), second load takes 1 clock (hit)
- To be clear, will show clocks for SUBI, BNEZ
- Reality: integer instructions ahead

Loop Example

Instruction status:

ITER	Instruction	j	k	Issue	Exec Comp	Write Result
1	LD F0	0	R1			
1	MULTD F4	F0	F2			
1	SD F4	0	R1			
2	LD F0	0	R1			
2	MULTD F4	F0	F2			
2	SD F4	0	R1			

	Busy	Addr	Fu
Load1	No		
Load2	No		
Load3	No		
Store1	No		
Store2	No		
Store3	No		

Reservation Stations:

Time	Name	Busy	Op	Vj	S1 Vk	S2 Qj	RS Qk	Code:			
	Add1	No						LD	F0	0	R1
	Add2	No						MULTD	F4	F0	F2
	Add3	No						SD	F4	0	R1
	Mult1	No						SUBI	R1	R1	#8
	Mult2	No						BNEZ	R1	Loop	

Register result status

Clock	R1		F0	F2	F4	F6	F8	F10	F12	...	F30
0	80	Fu									

Loop Example Cycle 1

Instruction status:

ITER	Instruction	j	k	Issue	Exec Comp	Write Result
1	LD F0	0	R1	1		
1	MULTD F4	F0	F2			
1	SD F4	0	R1			
2	LD F0	0	R1			
2	MULTD F4	F0	F2			
2	SD F4	0	R1			

	Busy	Addr	Fu
Load1	Yes	80	
Load2	No		
Load3	No		
Store1	No		
Store2	No		
Store3	No		

Reservation Stations:

Time	Name	Busy	Op	Vj	S1 Vk	S2 Qj	RS Qk	Code:			
	Add1	No						LD	F0	0	R1
	Add2	No						MULTD	F4	F0	F2
	Add3	No						SD	F4	0	R1
	Mult1	No						SUBI	R1	R1	#8
	Mult2	No						BNEZ	R1	Loop	

Register result status

Clock	R1		F0	F2	F4	F6	F8	F10	F12	...	F30
1	80	Fu	Load1								

Loop Example Cycle 2

Instruction status:

ITER	Instruction	j	k	Issue	Exec Comp	Write Result
1	LD F0	0	R1	1		
1	MULTD F4	F0	F2	2		
1	SD F4	0	R1			
2	LD F0	0	R1			
2	MULTD F4	F0	F2			
2	SD F4	0	R1			

	Busy	Addr	Fu
Load1	Yes	80	
Load2	No		
Load3	No		
Store1	No		
Store2	No		
Store3	No		

Reservation Stations:

Time	Name	Busy	Op	Vj	S1 Vk	S2 Qj	RS Qk	Code:			
	Add1	No						LD	F0	0	R1
	Add2	No						MULTD	F4	F0	F2
	Add3	No						SD	F4	0	R1
	Mult1	Yes	Multd		R(F4)	Load1		SUBI	R1	R1	#8
	Mult2	No						BNEZ	R1	Loop	

Register result status

Clock	R1		F0	F2	F4	F6	F8	F10	F12	...	F30
2	80	Fu	Load1		Mult1						

Loop Example Cycle 3

Instruction status:

ITER	Instruction	j	k	Issue	Exec Comp	Write Result
1	LD F0	0	R1	1		
1	MULTD F4	F0	F2	2		
1	SD F4	0	R1	3		
2	LD F0	0	R1			
2	MULTD F4	F0	F2			
2	SD F4	0	R1			

	Busy	Addr	Fu
Load1	Yes	80	
Load2	No		
Load3	No		
Store1	Yes	80	Mult1
Store2	No		
Store3	No		

Reservation Stations:

Time	Name	Busy	Op	Vj	Vk	S1 Qj	S2 Qk	RS
	Add1	No						
	Add2	No						
	Add3	No						
	Mult1	Yes	Multd		R(F4)	Load1		
	Mult2	No						

Code:

LD	F0	0	R1
MULTD	F4	F0	F2
SD	F4	0	R1
SUBI	R1	R1	#8
BNEZ	R1	Loop	

Register result status

Clock	R1		F0	F2	F4	F6	F8	F10	F12	...	F30
3	80	Fu	Load1		Mult1						

- Implicit renaming sets up "DataFlow" graph

Loop Example Cycle 4

Instruction status:

ITER	Instruction	j	k	Issue	Exec Comp	Write Result
1	LD F0	0	R1	1		
1	MULTD F4	F0	F2	2		
1	SD F4	0	R1	3		
2	LD F0	0	R1			
2	MULTD F4	F0	F2			
2	SD F4	0	R1			

	Busy	Addr	Fu
Load1	Yes	80	
Load2	No		
Load3	No		
Store1	Yes	80	Mult1
Store2	No		
Store3	No		

Reservation Stations:

Time	Name	Busy	Op	Vj	Vk	S1 Qj	S2 Qk	RS
	Add1	No						
	Add2	No						
	Add3	No						
	Mult1	Yes	Multd		R(F4)	Load1		
	Mult2	No						

Code:

LD	F0	0	R1
MULTD	F4	F0	F2
SD	F4	0	R1
SUBI	R1	R1	#8
BNEZ	R1	Loop	

Register result status

Clock	R1		F0	F2	F4	F6	F8	F10	F12	...	F30
4	80	Fu	Load1		Mult1						

- Dispatching SUBI Instruction

Loop Example Cycle 5

Instruction status:

ITER	Instruction	j	k	Issue	Exec Comp	Write Result
1	LD F0	0	R1	1		
1	MULTD F4	F0	F2	2		
1	SD F4	0	R1	3		
2	LD F0	0	R1			
2	MULTD F4	F0	F2			
2	SD F4	0	R1			

	Busy	Addr	Fu
Load1	Yes	80	
Load2	No		
Load3	No		
Store1	Yes	80	Mult1
Store2	No		
Store3	No		

Reservation Stations:

Time	Name	Busy	Op	Vj	Vk	S1 Qj	S2 Qk	RS
	Add1	No						
	Add2	No						
	Add3	No						
	Mult1	Yes	Multd		R(F4)	Load1		
	Mult2	No						

Code:

LD	F0	0	R1
MULTD	F4	F0	F2
SD	F4	0	R1
SUBI	R1	R1	#8
BNEZ	R1	Loop	

Register result status

Clock	R1		F0	F2	F4	F6	F8	F10	F12	...	F30
5	72	Fu	Load1		Mult1						

- And, BNEZ instruction

Loop Example Cycle 6

Instruction status:

ITER	Instruction	j	k	Issue	Exec Comp	Write Result
1	LD F0	0	R1	1		
1	MULTD F4	F0	F2	2		
1	SD F4	0	R1	3		
2	LD F0	0	R1	6		
2	MULTD F4	F0	F2			
2	SD F4	0	R1			

	Busy	Addr	Fu
Load1	Yes	80	
Load2	Yes	72	
Load3	No		
Store1	Yes	80	Mult1
Store2	No		
Store3	No		

Reservation Stations:

Time	Name	Busy	Op	Vj	Vk	S1 Qj	S2 Qk	RS
	Add1	No						
	Add2	No						
	Add3	No						
	Mult1	Yes	Multd		R(F4)	Load1		
	Mult2	No						

Code:

LD	F0	0	R1
MULTD	F4	F0	F2
SD	F4	0	R1
SUBI	R1	R1	#8
BNEZ	R1	Loop	

Register result status

Clock	R1		F0	F2	F4	F6	F8	F10	F12	...	F30
6	72	Fu	Load2		Mult1						

- Notice that F0 never sees Load from location 80

Loop Example Cycle 7

Instruction status:

ITER	Instruction	j	k	Issue	Exec Comp	Write Result
1	LD F0	0	R1	1		
1	MULTD F4	F0	F2	2		
1	SD F4	0	R1	3		
2	LD F0	0	R1	6		
2	MULTD F4	F0	F2	7		
2	SD F4	0	R1			

	Busy	Addr	Fu
Load1	Yes	80	
Load2	Yes	72	
Load3	No		
Store1	Yes	80	Mult1
Store2	No		
Store3	No		

Reservation Stations:

Time	Name	Busy	Op	Vj	S1 Vk	S2 Qj	RS Qk
	Add1	No					
	Add2	No					
	Add3	No					
	Mult1	Yes	Multd		R(F2)	Load1	
	Mult2	Yes	Multd		R(F2)	Load2	

Code:

LD	F0	0	R1
MULTD	F4	F0	F2
SD	F4	0	R1
SUBI	R1	R1	#8
BNEZ	R1	Loop	

Register result status

Clock	R1		F0	F2	F4	F6	F8	F10	F12	...	F30
7	72	Fu	Load2		Mult2						

- Register file completely detached from computation
- First and Second iteration completely overlapped

Loop Example Cycle 8

Instruction status:

ITER	Instruction	j	k	Issue	Exec Comp	Write Result
1	LD F0	0	R1	1		
1	MULTD F4	F0	F2	2		
1	SD F4	0	R1	3		
2	LD F0	0	R1	6		
2	MULTD F4	F0	F2	7		
2	SD F4	0	R1	8		

	Busy	Addr	Fu
Load1	Yes	80	
Load2	Yes	72	
Load3	No		
Store1	Yes	80	Mult1
Store2	Yes	72	Mult2
Store3	No		

Reservation Stations:

Time	Name	Busy	Op	Vj	S1 Vk	S2 Qj	RS Qk
	Add1	No					
	Add2	No					
	Add3	No					
	Mult1	Yes	Multd		R(F2)	Load1	
	Mult2	Yes	Multd		R(F2)	Load2	

Code:

LD	F0	0	R1
MULTD	F4	F0	F2
SD	F4	0	R1
SUBI	R1	R1	#8
BNEZ	R1	Loop	

Register result status

Clock	R1		F0	F2	F4	F6	F8	F10	F12	...	F30
8	72	Fu	Load2		Mult2						

Loop Example Cycle 9

Instruction status:

ITER	Instruction	j	k	Issue	Exec Comp	Write Result
1	LD F0	0	R1	1	9	
1	MULTD F4	F0	F2	2		
1	SD F4	0	R1	3		
2	LD F0	0	R1	6		
2	MULTD F4	F0	F2	7		
2	SD F4	0	R1	8		

	Busy	Addr	Fu
Load1	Yes	80	
Load2	Yes	72	
Load3	No		
Store1	Yes	80	Mult1
Store2	Yes	72	Mult2
Store3	No		

Reservation Stations:

Time	Name	Busy	Op	Vj	S1 Vk	S2 Qj	RS Qk
	Add1	No					
	Add2	No					
	Add3	No					
	Mult1	Yes	Multd		R(F2)	Load1	
	Mult2	Yes	Multd		R(F2)	Load2	

Code:

LD	F0	0	R1
MULTD	F4	F0	F2
SD	F4	0	R1
SUBI	R1	R1	#8
BNEZ	R1	Loop	

Register result status

Clock	R1		F0	F2	F4	F6	F8	F10	F12	...	F30
9	72	Fu	Load2		Mult2						

- Load1 completing: who is waiting?
- Note: Dispatching SUBI

Loop Example Cycle 10

Instruction status:

ITER	Instruction	j	k	Issue	Exec Comp	Write Result
1	LD F0	0	R1	1	9	10
1	MULTD F4	F0	F2	2		
1	SD F4	0	R1	3		
2	LD F0	0	R1	6	10	
2	MULTD F4	F0	F2	7		
2	SD F4	0	R1	8		

	Busy	Addr	Fu
Load1	No		
Load2	Yes	72	
Load3	No		
Store1	Yes	80	Mult1
Store2	Yes	72	Mult2
Store3	No		

Reservation Stations:

Time	Name	Busy	Op	Vj	S1 Vk	S2 Qj	RS Qk
	Add1	No					
	Add2	No					
	Add3	No					
4	Mult1	Yes	Multd	M[80]	R(F2)		
	Mult2	Yes	Multd		R(F2)	Load2	

Code:

LD	F0	0	R1
MULTD	F4	F0	F2
SD	F4	0	R1
SUBI	R1	R1	#8
BNEZ	R1	Loop	

Register result status

Clock	R1		F0	F2	F4	F6	F8	F10	F12	...	F30
10	64	Fu	Load2		Mult2						

- Load2 completing: who is waiting?
- Note: Dispatching BNEZ

Loop Example Cycle 11

Instruction status:

ITER	Instruction	j	k	Issue	Exec Comp	Write Result
1	LD F0	0	R1	1	9	10
1	MULTD F4	F0	F2	2		
1	SD F4	0	R1	3		
2	LD F0	0	R1	6	10	11
2	MULTD F4	F0	F2	7		
2	SD F4	0	R1	8		

	Busy	Addr	Fu
Load1	No		
Load2	No		
Load3	Yes	64	
Store1	Yes	80	Mult1
Store2	Yes	72	Mult2
Store3	No		

Reservation Stations:

Time	Name	Busy	Op	Vj	S1 Vk	S2 Qj	RS Qk
	Add1	No					
	Add2	No					
	Add3	No					
3	Mult1	Yes	Multd	M[80]	R(F2)		
4	Mult2	Yes	Multd	M[72]	R(F2)		

Code:

LD	F0	0	R1
MULTD	F4	F0	F2
SD	F4	0	R1
SUBI	R1	R1	#8
BNEZ	R1	Loop	

Register result status

Clock	R1		F0	F2	F4	F6	F8	F10	F12	...	F30
11	64	Fu	Load3		Mult2						

- **Next load in sequence**

Loop Example Cycle 12

Instruction status:

ITER	Instruction	j	k	Issue	Exec Comp	Write Result
1	LD F0	0	R1	1	9	10
1	MULTD F4	F0	F2	2		
1	SD F4	0	R1	3		
2	LD F0	0	R1	6	10	11
2	MULTD F4	F0	F2	7		
2	SD F4	0	R1	8		

	Busy	Addr	Fu
Load1	No		
Load2	No		
Load3	Yes	64	
Store1	Yes	80	Mult1
Store2	Yes	72	Mult2
Store3	No		

Reservation Stations:

Time	Name	Busy	Op	Vj	S1 Vk	S2 Qj	RS Qk
	Add1	No					
	Add2	No					
	Add3	No					
2	Mult1	Yes	Multd	M[80]	R(F2)		
3	Mult2	Yes	Multd	M[72]	R(F2)		

Code:

LD	F0	0	R1
MULTD	F4	F0	F2
SD	F4	0	R1
SUBI	R1	R1	#8
BNEZ	R1	Loop	

Register result status

Clock	R1		F0	F2	F4	F6	F8	F10	F12	...	F30
12	64	Fu	Load3		Mult2						

- **Why not issue third multiply?**

Loop Example Cycle 13

Instruction status:

ITER	Instruction	j	k	Issue	Exec Comp	Write Result
1	LD F0	0	R1	1	9	10
1	MULTD F4	F0	F2	2		
1	SD F4	0	R1	3		
2	LD F0	0	R1	6	10	11
2	MULTD F4	F0	F2	7		
2	SD F4	0	R1	8		

	Busy	Addr	Fu
Load1	No		
Load2	No		
Load3	Yes	64	
Store1	Yes	80	Mult1
Store2	Yes	72	Mult2
Store3	No		

Reservation Stations:

Time	Name	Busy	Op	Vj	S1 Vk	S2 Qj	RS Qk
	Add1	No					
	Add2	No					
	Add3	No					
1	Mult1	Yes	Multd	M[80]	R(F2)		
2	Mult2	Yes	Multd	M[72]	R(F2)		

Code:

LD	F0	0	R1
MULTD	F4	F0	F2
SD	F4	0	R1
SUBI	R1	R1	#8
BNEZ	R1	Loop	

Register result status

Clock	R1		F0	F2	F4	F6	F8	F10	F12	...	F30
13	64	Fu	Load3		Mult2						

Loop Example Cycle 14

Instruction status:

ITER	Instruction	j	k	Issue	Exec Comp	Write Result
1	LD F0	0	R1	1	9	10
1	MULTD F4	F0	F2	2	14	
1	SD F4	0	R1	3		
2	LD F0	0	R1	6	10	11
2	MULTD F4	F0	F2	7		
2	SD F4	0	R1	8		

	Busy	Addr	Fu
Load1	No		
Load2	No		
Load3	Yes	64	
Store1	Yes	80	Mult1
Store2	Yes	72	Mult2
Store3	No		

Reservation Stations:

Time	Name	Busy	Op	Vj	S1 Vk	S2 Qj	RS Qk
	Add1	No					
	Add2	No					
	Add3	No					
0	Mult1	Yes	Multd	M[80]	R(F2)		
1	Mult2	Yes	Multd	M[72]	R(F2)		

Code:

LD	F0	0	R1
MULTD	F4	F0	F2
SD	F4	0	R1
SUBI	R1	R1	#8
BNEZ	R1	Loop	

Register result status

Clock	R1		F0	F2	F4	F6	F8	F10	F12	...	F30
14	64	Fu	Load3		Mult2						

- **Mult1 completing. Who is waiting?**

Loop Example Cycle 15

Instruction status:

ITER	Instruction	j	k	Issue	Exec Comp	Write Result
1	LD F0	0	R1	1	9	10
1	MULTD F4	F0	F2	2	14	15
1	SD F4	0	R1	3		
2	LD F0	0	R1	6	10	11
2	MULTD F4	F0	F2	7	15	
2	SD F4	0	R1	8		

	Busy	Addr	Fu
Load1	No		
Load2	No		
Load3	Yes	64	
Store1	Yes	80	[80]*R2
Store2	Yes	72	Mult2
Store3	No		

Reservation Stations:

Time	Name	Busy	Op	Vj	S1 Vk	S2 Qj	RS Qk
	Add1	No					
	Add2	No					
	Add3	No					
	Mult1	No					
0	Mult2	Yes	Multd	M[72]	R(F2)		

Code:

LD	F0	0	R1
MULTD	F4	F0	F2
SD	F4	0	R1
SUBI	R1	R1	#8
BNEZ	R1	Loop	

Register result status

Clock	R1		F0	F2	F4	F6	F8	F10	F12	...	F30
15	64	Fu	Load3		Mult2						

- **Mult2 completing. Who is waiting?**

Loop Example Cycle 16

Instruction status:

ITER	Instruction	j	k	Issue	Exec Comp	Write Result
1	LD F0	0	R1	1	9	10
1	MULTD F4	F0	F2	2	14	15
1	SD F4	0	R1	3		
2	LD F0	0	R1	6	10	11
2	MULTD F4	F0	F2	7	15	16
2	SD F4	0	R1	8		

	Busy	Addr	Fu
Load1	No		
Load2	No		
Load3	Yes	64	
Store1	Yes	80	[80]*R2
Store2	Yes	72	[72]*R2
Store3	No		

Reservation Stations:

Time	Name	Busy	Op	Vj	S1 Vk	S2 Qj	RS Qk
	Add1	No					
	Add2	No					
	Add3	No					
	Mult1	Yes	Multd		R(F2)	Load3	
	Mult2	No					

Code:

LD	F0	0	R1
MULTD	F4	F0	F2
SD	F4	0	R1
SUBI	R1	R1	#8
BNEZ	R1	Loop	

Register result status

Clock	R1		F0	F2	F4	F6	F8	F10	F12	...	F30
16	64	Fu	Load3		Mult1						

Loop Example Cycle 17

Instruction status:

ITER	Instruction	j	k	Issue	Exec Comp	Write Result
1	LD F0	0	R1	1	9	10
1	MULTD F4	F0	F2	2	14	15
1	SD F4	0	R1	3		
2	LD F0	0	R1	6	10	11
2	MULTD F4	F0	F2	7	15	16
2	SD F4	0	R1	8		

	Busy	Addr	Fu
Load1	No		
Load2	No		
Load3	Yes	64	
Store1	Yes	80	[80]*R2
Store2	Yes	72	[72]*R2
Store3	Yes	64	Mult1

Reservation Stations:

Time	Name	Busy	Op	Vj	S1 Vk	S2 Qj	RS Qk
	Add1	No					
	Add2	No					
	Add3	No					
	Mult1	Yes	Multd		R(F2)	Load3	
	Mult2	No					

Code:

LD	F0	0	R1
MULTD	F4	F0	F2
SD	F4	0	R1
SUBI	R1	R1	#8
BNEZ	R1	Loop	

Register result status

Clock	R1		F0	F2	F4	F6	F8	F10	F12	...	F30
17	64	Fu	Load3		Mult1						

Loop Example Cycle 18

Instruction status:

ITER	Instruction	j	k	Issue	Exec Comp	Write Result
1	LD F0	0	R1	1	9	10
1	MULTD F4	F0	F2	2	14	15
1	SD F4	0	R1	3	18	
2	LD F0	0	R1	6	10	11
2	MULTD F4	F0	F2	7	15	16
2	SD F4	0	R1	8		

	Busy	Addr	Fu
Load1	No		
Load2	No		
Load3	Yes	64	
Store1	Yes	80	[80]*R2
Store2	Yes	72	[72]*R2
Store3	Yes	64	Mult1

Reservation Stations:

Time	Name	Busy	Op	Vj	S1 Vk	S2 Qj	RS Qk
	Add1	No					
	Add2	No					
	Add3	No					
	Mult1	Yes	Multd		R(F2)	Load3	
	Mult2	No					

Code:

LD	F0	0	R1
MULTD	F4	F0	F2
SD	F4	0	R1
SUBI	R1	R1	#8
BNEZ	R1	Loop	

Register result status

Clock	R1		F0	F2	F4	F6	F8	F10	F12	...	F30
18	64	Fu	Load3		Mult1						

Loop Example Cycle 19

Instruction status:

ITER	Instruction		j	k	Issue	Exec Comp	Write Result		Busy	Addr	Fu
1	LD	F0	0	R1	1	9	10	Load1	No		
1	MULTD	F4	F0	F2	2	14	15	Load2	No		
1	SD	F4	0	R1	3	18	19	Load3	Yes	64	
2	LD	F0	0	R1	6	10	11	Store1	No		
2	MULTD	F4	F0	F2	7	15	16	Store2	Yes	72	[72]*R2
2	SD	F4	0	R1	8	19		Store3	Yes	64	Mult1

Reservation Stations:

Time	Name	Busy	Op	Vj	S1 Vk	S2 Qj	RS Qk	Code:			
	Add1	No						LD	F0	0	R1
	Add2	No						MULTD	F4	F0	F2
	Add3	No						SD	F4	0	R1
	Mult1	Yes	Multd		R(F2)	Load3		SUBI	R1	R1	#8
	Mult2	No						BNEZ	R1	Loop	

Register result status

Clock	R1		F0	F2	F4	F6	F8	F10	F12	...	F30
19	64	Fu	Load3		Mult1						

Loop Example Cycle 20

Instruction status:

ITER	Instruction		j	k	Issue	Exec Comp	Write Result		Busy	Addr	Fu
1	LD	F0	0	R1	1	9	10	Load1	No		
1	MULTD	F4	F0	F2	2	14	15	Load2	No		
1	SD	F4	0	R1	3	18	19	Load3	Yes	64	
2	LD	F0	0	R1	6	10	11	Store1	No		
2	MULTD	F4	F0	F2	7	15	16	Store2	No		
2	SD	F4	0	R1	8	19	20	Store3	Yes	64	Mult1

Reservation Stations:

Time	Name	Busy	Op	Vj	S1 Vk	S2 Qj	RS Qk	Code:			
	Add1	No						LD	F0	0	R1
	Add2	No						MULTD	F4	F0	F2
	Add3	No						SD	F4	0	R1
	Mult1	Yes	Multd		R(F2)	Load3		SUBI	R1	R1	#8
	Mult2	No						BNEZ	R1	Loop	

Register result status

Clock	R1		F0	F2	F4	F6	F8	F10	F12	...	F30
20	64	Fu	Load3		Mult1						

Why can Tomasulo overlap iterations of loops?

- Register renaming
  - Multiple iterations use different physical destinations for registers (dynamic loop unrolling).
- Reservation stations
  - Permit instruction issue to advance past integer control flow operations
- Other idea: Tomasulo building "DataFlow" graph on the fly.

Data-Flow Architectures

- Basic Idea: Hardware respresents direct encoding of compiler dataflow graphs:

```
Input: a,b
   y:= (a+b)/x
   x:= (a*(a+b))+b
output: y,x
```

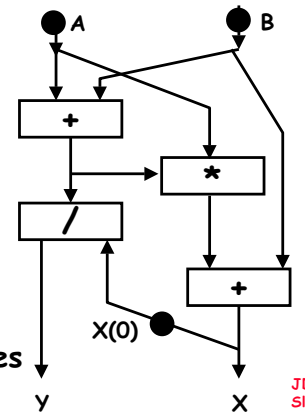

- Data flows along arcs in "Tokens".
- When two tokens arrive at compute box, box "fires" and produces new token.
- Split operations produce copies of tokens

Paper by Dennis and Misunas

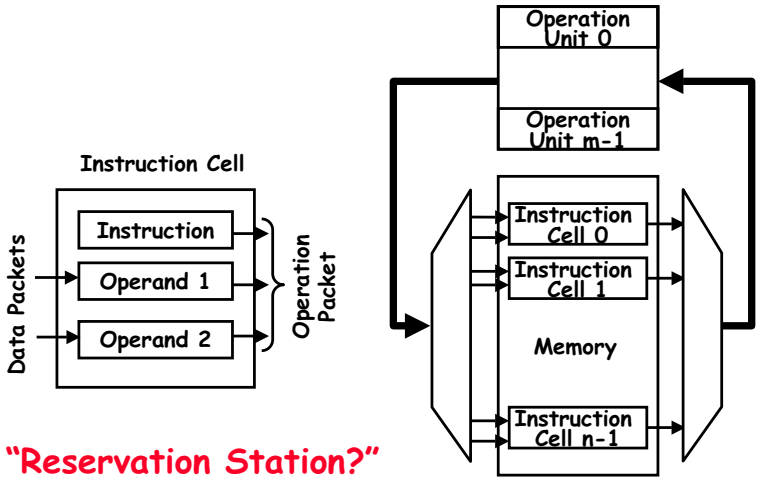

"Reservation Station?"

Brief, In-class discussion of Monsoon

What about Precise Interrupts?

- Both Scoreboard and Tomasulo have:

  In-order issue, out-of-order execution, and out-of-order completion

- Need to "fix" the out-of-order completion aspect so that we can find precise breakpoint in instruction stream.

Relationship between precise interrupts and specultation:

- Speculation is a form of guessing.
- Important for branch prediction:
  - Need to "take our best shot" at predicting branch direction.
  - If we issue multiple instructions per cycle, lose lots of potential instructions otherwise:
    - » Consider 4 instructions per cycle
    - » If take single cycle to decide on branch, waste from 4 - 7 instruction slots!
- If we speculate and are wrong, need to back up and restart execution to point at which we predicted incorrectly:
  - This is exactly same as precise exceptions!
- Technique for both precise interrupts/exceptions and speculation: *in-order completion or commit*

HW support for precise interrupts

- Need HW buffer for results of uncommitted instructions: *reorder buffer*
  - 3 fields: instr, destination, value
  - Reorder buffer can be operand source => more registers like RS
  - Use reorder buffer number instead of reservation station when execution completes
  - Supplies operands between execution complete & commit
  - Once operand commits, result is put into register
  - Instructions commit
  - As a result, its easy to undo speculated instructions on mispredicted branches or on exceptions

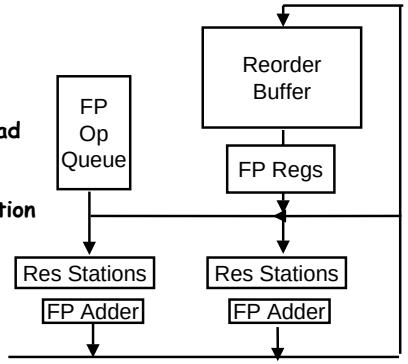

Four Steps of Speculative Tomasulo Algorithm

1. **Issue**—get instruction from FP Op Queue

   If reservation station and reorder buffer slot free, issue instr & send operands & reorder buffer no. for destination (this stage sometimes called "dispatch")

2. **Execution**—operate on operands (EX)

   When both operands ready then execute; if not ready, watch CDB for result; when both in reservation station, execute; checks RAW (sometimes called "issue")

3. **Write result**—finish execution (WB)

   Write on Common Data Bus to all awaiting FUs & reorder buffer; mark reservation station available.

4. **Commit**—update register with reorder result

   - When instr. at head of reorder buffer & result present, update register with result (or store to memory) and remove instr from reorder buffer. Mispredicted branch flushes reorder buffer (sometimes called "graduation")

What are the hardware complexities with reorder buffer?

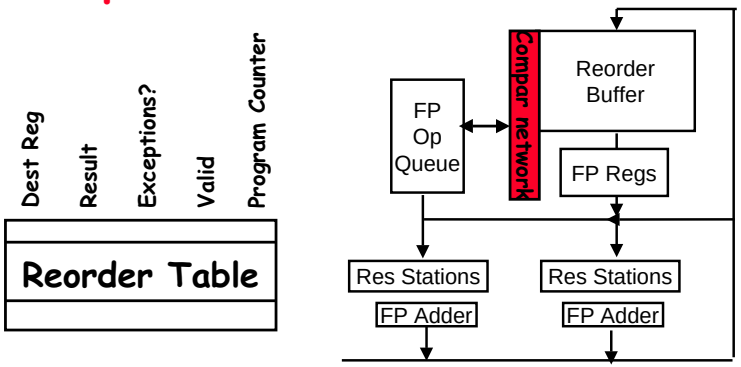

- Need fully-associative comparison with all reorder entries on instruction dispatch to find latest version of register.
- Need as many ports as register file

Explicit Register Renaming

- Make use of a *physical* register file that is larger than number of registers specified by ISA
- Keep a translation table:
  - ISA register => physical register mapping
  - When register is written, replace table entry with new register from freelist.
  - Physical register becomes free when not being used by any instructions in progress.
- Pipeline can be exactly like "standard" DLX pipeline
  - IF, ID, EX, etc….
- Advantages:
  - Removes all WAR and WAW hazards
  - Like Tomasulo, good for allowing full out-of-order completion
  - Allows data to be fetched from a single register file
  - Makes speculative execution/precise interrupts easier:
    - » All that needs to be "undone" for precise break point is to undo the table mappings

Question: Can we use explicit register renaming with scoreboard?

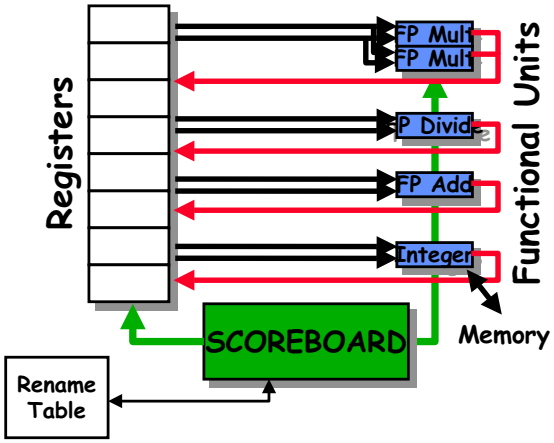

Scoreboard Example

Instruction status:

Instruction	j	k	Issue	Read Oper	Exec Comp	Write Result
LD	F6	34+	R2			
LD	F2	45+	R3			
MULTD	F0	F2	F4			
SUBD	F8	F6	F2			
DIVD	F10	F0	F6			
ADDD	F6	F8	F2			

Functional unit status:

Time	Name	Busy	Op	dest Fi	S1 Fj	S2 Fk	FU Qj	FU Qk	Fj? Rj	Fk? Rk
	Int1	No								
	Int2	No								
	Mult1	No								
	Add	No								
	Divide	No								

Register Rename and Result

Clock		F0	F2	F4	F6	F8	F10	F12	...	F30
	FU	P0	P2	P4	P6	P8	P10	P12		P30

- Initialized Rename Table

Renamed Scoreboard 1

Instruction status:

Instruction	j	k	Issue	Read Oper	Exec Comp	Write Result
LD	F6	34+	R2	1		
LD	F2	45+	R3			
MULTD	F0	F2	F4			
SUBD	F8	F6	F2			
DIVD	F10	F0	F6			
ADDD	F6	F8	F2			

Functional unit status:

Time	Name	Busy	Op	dest Fi	S1 Fj	S2 Fk	FU Qj	FU Qk	Fj? Rj	Fk? Rk
	Int1	Yes	Load	P32		R2				Yes
	Int2	No								
	Mult1	No								
	Add	No								
	Divide	No								

Register Rename and Result

Clock		F0	F2	F4	F6	F8	F10	F12	...	F30
1	FU	P0	P2	P4	P32	P8	P10	P12		P30

- Each instruction allocates free register
- Similar to single-assignment compiler transformation

Renamed Scoreboard 2

Instruction status:

Instruction	j	k	Issue	Read Oper	Exec Comp	Write Result
LD	F6	34+	R2	1	2	
LD	F2	45+	R3	2		
MULTD	F0	F2	F4			
SUBD	F8	F6	F2			
DIVD	F10	F0	F6			
ADDD	F6	F8	F2			

Functional unit status:

Time	Name	Busy	Op	dest Fi	S1 Fj	S2 Fk	FU Qj	FU Qk	Fj? Rj	Fk? Rk
	Int1	Yes	Load	P32		R2				Yes
	Int2	Yes	Load	P34		R3				Yes
	Mult1	No								
	Add	No								
	Divide	No								

Register Rename and Result

Clock		F0	F2	F4	F6	F8	F10	F12	...	F30
2	FU	P0	P34	P4	P32	P8	P10	P12		P30

Renamed Scoreboard 3

Instruction status:

Instruction	j	k	Issue	Read Oper	Exec Comp	Write Result
LD	F6	34+ R2	1	2	3	
LD	F2	45+ R3	2	3		
MULTD	F0	F2 F4	3			
SUBD	F8	F6 F2				
DIVD	F10	F0 F6				
ADDD	F6	F8 F2				

Functional unit status:

Time	Name	Busy	Op	dest Fi	S1 Fj	S2 Fk	FU Qj	FU Qk	Fj? Rj	Fk? Rk
	Int1	Yes	Load	P32		R2				Yes
	Int2	Yes	Load	P34		R3				Yes
	Mult1	Yes	Multd	P36	P34	P4	Int2		No	Yes
	Add	No								
	Divide	No								

Register Rename and Result

Clock		F0	F2	F4	F6	F8	F10	F12	...	F30
3	FU	P36	P34	P4	P32	P8	P10	P12		P30

Renamed Scoreboard 4

Instruction status:

Instruction	j	k	Issue	Read Oper	Exec Comp	Write Result
LD	F6	34+ R2	1	2	3	4
LD	F2	45+ R3	2	3	4	
MULTD	F0	F2 F4	3			
SUBD	F8	F6 F2	4			
DIVD	F10	F0 F6				
ADDD	F6	F8 F2				

Functional unit status:

Time	Name	Busy	Op	dest Fi	S1 Fj	S2 Fk	FU Qj	FU Qk	Fj? Rj	Fk? Rk
	Int1	No								
	Int2	Yes	Load	P34		R3				Yes
	Mult1	Yes	Multd	P36	P34	P4	Int2		No	Yes
	Add	Yes	Sub	P38	P32	P34		Int2	Yes	No
	Divide	No								

Register Rename and Result

Clock		F0	F2	F4	F6	F8	F10	F12	...	F30
4	FU	P36	P34	P4	P32	P38	P10	P12		P30

Renamed Scoreboard 5

Instruction status:

Instruction	j	k	Issue	Read Oper	Exec Comp	Write Result
LD	F6	34+ R2	1	2	3	4
LD	F2	45+ R3	2	3	4	5
MULTD	F0	F2 F4	3			
SUBD	F8	F6 F2	4			
DIVD	F10	F0 F6	5			
ADDD	F6	F8 F2				

Functional unit status:

Time	Name	Busy	Op	dest Fi	S1 Fj	S2 Fk	FU Qj	FU Qk	Fj? Rj	Fk? Rk
	Int1	No								
	Int2	No								
	Mult1	Yes	Multd	P36	P34	P4			Yes	Yes
	Add	Yes	Sub	P38	P32	P34			Yes	Yes
	Divide	Yes	Divd	P40	P36	P32	Mult1		No	Yes

Register Rename and Result

Clock		F0	F2	F4	F6	F8	F10	F12	...	F30
5	FU	P36	P34	P4	P32	P38	P40	P12		P30

Renamed Scoreboard 6

Instruction status:

Instruction	j	k	Issue	Read Oper	Exec Comp	Write Result
LD	F6	34+ R2	1	2	3	4
LD	F2	45+ R3	2	3	4	5
MULTD	F0	F2 F4	3	6		
SUBD	F8	F6 F2	4	6		
DIVD	F10	F0 F6	5			
ADDD	F6	F8 F2				

Functional unit status:

Time	Name	Busy	Op	dest Fi	S1 Fj	S2 Fk	FU Qj	FU Qk	Fj? Rj	Fk? Rk
	Int1	No								
	Int2	No								
10	Mult1	Yes	Multd	P36	P34	P4			Yes	Yes
2	Add	Yes	Sub	P38	P32	P34			Yes	Yes
	Divide	Yes	Divd	P40	P36	P32	Mult1		No	Yes

Register Rename and Result

Clock		F0	F2	F4	F6	F8	F10	F12	...	F30
6	FU	P36	P34	P4	P32	P38	P40	P12		P30

Renamed Scoreboard 7

Instruction status:

Instruction		j	k	Issue	Read Oper	Exec Comp	Write Result
LD	F6	34+	R2	1	2	3	4
LD	F2	45+	R3	2	3	4	5
MULTD	F0	F2	F4	3	6		
SUBD	F8	F6	F2	4	6		
DIVD	F10	F0	F6	5			
ADDD	F6	F8	F2				

Functional unit status:

Time	Name	Busy	Op	dest Fi	S1 Fj	S2 Fk	FU Qj	FU Qk	Fj? Rj	Fk? Rk
	Int1	No								
	Int2	No								
9	Mult1	Yes	Multd	P36	P34	P4			Yes	Yes
1	Add	Yes	Sub	P38	P32	P34			Yes	Yes
	Divide	Yes	Divd	P40	P36	P32	Mult1		No	Yes

Register Rename and Result

Clock		F0	F2	F4	F6	F8	F10	F12	...	F30
7	FU	P36	P34	P4	P32	P38	P40	P12		P30

Renamed Scoreboard 8

Instruction status:

Instruction		j	k	Issue	Read Oper	Exec Comp	Write Result
LD	F6	34+	R2	1	2	3	4
LD	F2	45+	R3	2	3	4	5
MULTD	F0	F2	F4	3	6		
SUBD	F8	F6	F2	4	6	8	
DIVD	F10	F0	F6	5			
ADDD	F6	F8	F2				

Functional unit status:

Time	Name	Busy	Op	dest Fi	S1 Fj	S2 Fk	FU Qj	FU Qk	Fj? Rj	Fk? Rk
	Int1	No								
	Int2	No								
8	Mult1	Yes	Multd	P36	P34	P4			Yes	Yes
0	Add	Yes	Sub	P38	P32	P34			Yes	Yes
	Divide	Yes	Divd	P40	P36	P32	Mult1		No	Yes

Register Rename and Result

Clock		F0	F2	F4	F6	F8	F10	F12	...	F30
8	FU	P36	P34	P4	P32	P38	P40	P12		P30

Renamed Scoreboard 9

Instruction status:

Instruction		j	k	Issue	Read Oper	Exec Comp	Write Result
LD	F6	34+	R2	1	2	3	4
LD	F2	45+	R3	2	3	4	5
MULTD	F0	F2	F4	3	6		
SUBD	F8	F6	F2	4	6	8	9
DIVD	F10	F0	F6	5			
ADDD	F6	F8	F2				

Functional unit status:

Time	Name	Busy	Op	dest Fi	S1 Fj	S2 Fk	FU Qj	FU Qk	Fj? Rj	Fk? Rk
	Int1	No								
	Int2	No								
7	Mult1	Yes	Multd	P36	P34	P4			Yes	Yes
	Add	No								
	Divide	Yes	Divd	P40	P36	P32	Mult1		No	Yes

Register Rename and Result

Clock		F0	F2	F4	F6	F8	F10	F12	...	F30
9	FU	P36	P34	P4	P32	P38	P40	P12		P30

Renamed Scoreboard 10

Instruction status:

Instruction		j	k	Issue	Read Oper	Exec Comp	Write Result
LD	F6	34+	R2	1	2	3	4
LD	F2	45+	R3	2	3	4	5
MULTD	F0	F2	F4	3	6		
SUBD	F8	F6	F2	4	6	8	9
DIVD	F10	F0	F6	5			
ADDD	F6	F8	F2	10			

Functional unit status:

Time	Name	Busy	Op	dest Fi	S1 Fj	S2 Fk	FU Qj	FU Qk	Fj? Rj	Fk? Rk
	Int1	No								
	Int2	No								
6	Mult1	Yes	Multd	P36	P34	P4			Yes	Yes
	Add	Yes	Addd	P42	P38	P34			Yes	Yes
	Divide	Yes	Divd	P40	P36	P32	Mult1		No	Yes

WAR Hazard gone!

Register Rename and Result

Clock		F0	F2	F4	F6	F8	F10	F12	...	F30
10	FU	P36	P34	P4	P42	P38	P40	P12		P30

- Notice that P32 not listed in Rename Table
  - Still live. Must not be reallocated by accident

Renamed Scoreboard 11

Instruction status:

Instruction		j	k	Issue	Read Oper	Exec Comp	Write Result
LD	F6	34+	R2	1	2	3	4
LD	F2	45+	R3	2	3	4	5
MULTD	F0	F2	F4	3	6		
SUBD	F8	F6	F2	4	6	8	9
DIVD	F10	F0	F6	5			
ADDD	F6	F8	F2	10	11		

Functional unit status:

Time	Name	Busy	Op	dest Fi	S1 Fj	S2 Fk	FU Qj	FU Qk	Fj? Rj	Fk? Rk
	Int1	No								
	Int2	No								
5	Mult1	Yes	Multd	P36	P34	P4			Yes	Yes
2	Add	Yes	Addd	P42	P38	P34			Yes	Yes
	Divide	Yes	Divd	P40	P36	P32	Mult1		No	Yes

Register Rename and Result

Clock		F0	F2	F4	F6	F8	F10	F12	...	F30
11	*FU*	P36	P34	P4	P42	P38	P40	P12		P30

Renamed Scoreboard 12

Instruction status:

Instruction		j	k	Issue	Read Oper	Exec Comp	Write Result
LD	F6	34+	R2	1	2	3	4
LD	F2	45+	R3	2	3	4	5
MULTD	F0	F2	F4	3	6		
SUBD	F8	F6	F2	4	6	8	9
DIVD	F10	F0	F6	5			
ADDD	F6	F8	F2	10	11		

Functional unit status:

Time	Name	Busy	Op	dest Fi	S1 Fj	S2 Fk	FU Qj	FU Qk	Fj? Rj	Fk? Rk
	Int1	No								
	Int2	No								
4	Mult1	Yes	Multd	P36	P34	P4			Yes	Yes
1	Add	Yes	Addd	P42	P38	P34			Yes	Yes
	Divide	Yes	Divd	P40	P36	P32	Mult1		No	Yes

Register Rename and Result

Clock		F0	F2	F4	F6	F8	F10	F12	...	F30
12	*FU*	P36	P34	P4	P42	P38	P40	P12		P30

Renamed Scoreboard 13

Instruction status:

Instruction		j	k	Issue	Read Oper	Exec Comp	Write Result
LD	F6	34+	R2	1	2	3	4
LD	F2	45+	R3	2	3	4	5
MULTD	F0	F2	F4	3	6		
SUBD	F8	F6	F2	4	6	8	9
DIVD	F10	F0	F6	5			
ADDD	F6	F8	F2	10	11	13	

Functional unit status:

Time	Name	Busy	Op	dest Fi	S1 Fj	S2 Fk	FU Qj	FU Qk	Fj? Rj	Fk? Rk
	Int1	No								
	Int2	No								
3	Mult1	Yes	Multd	P36	P34	P4			Yes	Yes
0	Add	Yes	Addd	P42	P38	P34			Yes	Yes
	Divide	Yes	Divd	P40	P36	P32	Mult1		No	Yes

Register Rename and Result

Clock		F0	F2	F4	F6	F8	F10	F12	...	F30
13	*FU*	P36	P34	P4	P42	P38	P40	P12		P30

Renamed Scoreboard 14

Instruction status:

Instruction		j	k	Issue	Read Oper	Exec Comp	Write Result
LD	F6	34+	R2	1	2	3	4
LD	F2	45+	R3	2	3	4	5
MULTD	F0	F2	F4	3	6		
SUBD	F8	F6	F2	4	6	8	9
DIVD	F10	F0	F6	5			
ADDD	F6	F8	F2	10	11	13	14

Functional unit status:

Time	Name	Busy	Op	dest Fi	S1 Fj	S2 Fk	FU Qj	FU Qk	Fj? Rj	Fk? Rk
	Int1	No								
	Int2	No								
2	Mult1	Yes	Multd	P36	P34	P4			Yes	Yes
	Add	No								
	Divide	Yes	Divd	P40	P36	P32	Mult1		No	Yes

Register Rename and Result

Clock		F0	F2	F4	F6	F8	F10	F12	...	F30
14	*FU*	P36	P34	P4	P42	P38	P40	P12		P30

Renamed Scoreboard 15

Instruction status:

Instruction		j	k	Issue	Read Oper	Exec Comp	Write Result
LD	F6	34+	R2	1	2	3	4
LD	F2	45+	R3	2	3	4	5
MULTD	F0	F2	F4	3	6		
SUBD	F8	F6	F2	4	6	8	9
DIVD	F10	F0	F6	5			
ADDD	F6	F8	F2	10	11	13	14

Functional unit status:

Time	Name	Busy	Op	dest Fi	S1 Fj	S2 Fk	FU Qj	FU Qk	Fj? Rj	Fk? Rk
	Int1	No								
	Int2	No								
1	Mult1	Yes	Multd	P36	P34	P4			Yes	Yes
	Add	No								
	Divide	Yes	Divd	P40	P36	P32	Mult1		No	Yes

Register Rename and Result

Clock		F0	F2	F4	F6	F8	F10	F12	...	F30
15	*FU*	P36	P34	P4	P42	P38	P40	P12		P30

Renamed Scoreboard 16

Instruction status:

Instruction		j	k	Issue	Read Oper	Exec Comp	Write Result
LD	F6	34+	R2	1	2	3	4
LD	F2	45+	R3	2	3	4	5
MULTD	F0	F2	F4	3	6	16	
SUBD	F8	F6	F2	4	6	8	9
DIVD	F10	F0	F6	5			
ADDD	F6	F8	F2	10	11	13	14

Functional unit status:

Time	Name	Busy	Op	dest Fi	S1 Fj	S2 Fk	FU Qj	FU Qk	Fj? Rj	Fk? Rk
	Int1	No								
	Int2	No								
0	Mult1	Yes	Multd	P36	P34	P4			Yes	Yes
	Add	No								
	Divide	Yes	Divd	P40	P36	P32	Mult1		No	Yes

Register Rename and Result

Clock		F0	F2	F4	F6	F8	F10	F12	...	F30
16	*FU*	P36	P34	P4	P42	P38	P40	P12		P30

Renamed Scoreboard 17

Instruction status:

Instruction		j	k	Issue	Read Oper	Exec Comp	Write Result
LD	F6	34+	R2	1	2	3	4
LD	F2	45+	R3	2	3	4	5
MULTD	F0	F2	F4	3	6	16	17
SUBD	F8	F6	F2	4	6	8	9
DIVD	F10	F0	F6	5			
ADDD	F6	F8	F2	10	11	13	14

Functional unit status:

Time	Name	Busy	Op	dest Fi	S1 Fj	S2 Fk	FU Qj	FU Qk	Fj? Rj	Fk? Rk
	Int1	No								
	Int2	No								
	Mult1	No								
	Add	No								
	Divide	Yes	Divd	P40	P36	P32	Mult1		Yes	Yes

Register Rename and Result

Clock		F0	F2	F4	F6	F8	F10	F12	...	F30
17	*FU*	P36	P34	P4	P42	P38	P40	P12		P30

Renamed Scoreboard 18

Instruction status:

Instruction		j	k	Issue	Read Oper	Exec Comp	Write Result
LD	F6	34+	R2	1	2	3	4
LD	F2	45+	R3	2	3	4	5
MULTD	F0	F2	F4	3	6	16	17
SUBD	F8	F6	F2	4	6	8	9
DIVD	F10	F0	F6	5	18		
ADDD	F6	F8	F2	10	11	13	14

Functional unit status:

Time	Name	Busy	Op	dest Fi	S1 Fj	S2 Fk	FU Qj	FU Qk	Fj? Rj	Fk? Rk
	Int1	No								
	Int2	No								
	Mult1	No								
	Add	No								
40	Divide	Yes	Divd	P40	P36	P32	Mult1		Yes	Yes

Register Rename and Result

Clock		F0	F2	F4	F6	F8	F10	F12	...	F30
18	*FU*	P36	P34	P4	P42	P38	P40	P12		P30

Explicit Renaming Support Includes:

- Rapid access to a table of translations
- A physical register file that has more registers than specified by the ISA
- Ability to figure out which physical registers are free.
  - No free registers ⇒ stall on issue
- Thus, register renaming doesn't require reservation stations. However:
  - Many modern architectures use explicit register renaming + Tomasulo-like reservation stations to control execution.

Discussion of R10000

Dynamic Scheduling in PowerPC 604 and Pentium Pro

- Both In-order Issue, Out-of-order execution, In-order Commit

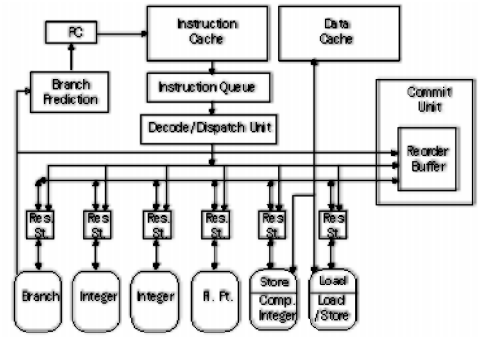

Pentium Pro more like a scoreboard since central control vs. distributed

Dynamic Scheduling in PowerPC 604 and Pentium Pro

Parameter	PPC	PPro
Max. instructions issued/clock	4	3
Max. instr. complete exec./clock	6	5
Max. instr. commited/clock	6	3
Window (Instrs in reorder buffer)	16	40
Number of reservations stations	12	20
Number of rename registers	8int/12FP	40
No. integer functional units (FUs)	2	2
No. floating point FUs	1	1
No. branch FUs	1	1
No. complex integer FUs	1	0
No. memory FUs	1	1 load +1 store

Q: How pipeline 1 to 17 byte x86 instructions?

Dynamic Scheduling in Pentium Pro

- PPro doesn't pipeline 80x86 instructions
- PPro decode unit translates the Intel instructions into 72-bit micro-operations (- DLX)
- Sends micro-operations to reorder buffer & reservation stations
- Takes 1 clock cycle to determine length of 80x86 instructions + 2 more to create the micro-operations
- 12-14 clocks in total pipeline (- 3 state machines)
- Many instructions translate to 1 to 4 micro-operations
- Complex 80x86 instructions are executed by a conventional microprogram (8K x 72 bits) that issues long sequences of micro-operations

Getting CPI < 1: Issuing Multiple Instructions/Cycle

- Two variations
- Superscalar: varying no. instructions/cycle (1 to 8), scheduled by compiler or by HW (Tomasulo)
  - IBM PowerPC, Sun UltraSparc, DEC Alpha, HP 8000
- (Very) Long Instruction Words (V)LIW: fixed number of instructions (4-16) scheduled by the compiler; put ops into wide templates
  - Joint HP/Intel agreement in 1999/2000?
  - Intel Architecture-64 (IA-64) 64-bit address
  - Style: "Explicitly Parallel Instruction Computer (EPIC)"
- Anticipated success lead to use of Instructions Per Clock cycle (IPC) vs. CPI

Getting CPI < 1: Issuing Multiple Instructions/Cycle

- Superscalar DLX: 2 instructions, 1 FP & 1 anything else
  - Fetch 64-bits/clock cycle; Int on left, FP on right
  - Can only issue 2nd instruction if 1st instruction issues
  - More ports for FP registers to do FP load & FP op in a pair

Type	*Pipe Stages*						
Int. instruction		IF	ID	EX	MEM	WB	
FP instruction	IF	ID	EX	MEM	WB		
Int. instruction			IF	ID	EX	MEM	WB
FP instruction		IF	ID	EX	MEM	WB	
Int. instruction				IF	ID	EX	MEM WB
FP instruction			IF	ID	EX	MEM	WB

- 1 cycle load delay expands to 3 instructions in SS
  - instruction in right half can't use it, nor instructions in next slot

Review: Unrolled Loop that Minimizes Stalls for Scalar

```
1 Loop: LD     F0,0(R1)
2       LD     F6,-8(R1)
3       LD     F10,-16(R1)
4       LD     F14,-24(R1)
5       ADDD   F4,F0,F2
6       ADDD   F8,F6,F2
7       ADDD   F12,F10,F2
8       ADDD   F16,F14,F2
9       SD     0(R1),F4
10      SD     -8(R1),F8
11      SD     -16(R1),F12
12      SUBI   R1,R1,#32
13      BNEZ   R1,LOOP
14      SD     8(R1),F16     ; 8-32 = -24
```

LD to ADDD: 1 Cycle
ADDD to SD: 2 Cycles

14 clock cycles, or 3.5 per iteration

Loop Unrolling in Superscalar

	Integer instruction	*FP instruction*	*Clock cycle*
Loop:	LD F0,0(R1)		1
	LD F6,-8(R1)		2
	LD F10,-16(R1)	ADDD F4,F0,F2	3
	LD F14,-24(R1)	ADDD F8,F6,F2	4
	LD F18,-32(R1)	ADDD F12,F10,F2	5
	SD 0(R1),F4	ADDD F16,F14,F2	6
	SD -8(R1),F8	ADDD F20,F18,F2	7
	SD -16(R1),F12		8
	SD -24(R1),F16		9
	SUBI R1,R1,#40		10
	BNEZ R1,LOOP		11
	SD -32(R1),F20		12

- Unrolled 5 times to avoid delays (+1 due to SS)
- 12 clocks, or 2.4 clocks per iteration (1.5X)

Multiple Issue Challenges

- While Integer/FP split is simple for the HW, get CPI of 0.5 only for programs with:
  - Exactly 50% FP operations
  - No hazards
- If more instructions issue at same time, greater difficulty of decode and issue
  - Even 2-scalar => examine 2 opcodes, 6 register specifiers, & decide if 1 or 2 instructions can issue
- VLIW: tradeoff instruction space for simple decoding
  - The long instruction word has room for many operations
  - By definition, all the operations the compiler puts in the long instruction word are independent => execute in parallel
  - E.g., 2 integer operations, 2 FP ops, 2 Memory refs, 1 branch
    - » 16 to 24 bits per field => 7*16 or 112 bits to 7*24 or 168 bits wide
  - Need compiling technique that schedules across several branches

Loop Unrolling in VLIW

Memory reference 1	*Memory reference 2*	*FP operation 1*	*FP op. 2*	*Int. op/ branch*	*Clock*
LD F0,0(R1)	LD F6,-8(R1)				1
LD F10,-16(R1)	LD F14,-24(R1)				2
LD F18,-32(R1)	LD F22,-40(R1)	ADDD F4,F0,F2	ADDD F8,F6,F2		3
LD F26,-48(R1)		ADDD F12,F10,F2	ADDD F16,F14,F2		4
		ADDD F20,F18,F2	ADDD F24,F22,F2		5
SD 0(R1),F4	SD -8(R1),F8	ADDD F28,F26,F2			6
SD -16(R1),F12	SD -24(R1),F16				7
SD -32(R1),F20	SD -40(R1),F24			SUBI R1,R1,#48	8
SD -0(R1),F28				BNEZ R1,LOOP	9

Unrolled 7 times to avoid delays

7 results in 9 clocks, or 1.3 clocks per iteration (1.8X)

Average: 2.5 ops per clock, 50% efficiency

Note: Need more registers in VLIW (15 vs. 6 in SS)

Trace Scheduling

- Parallelism across IF branches vs. LOOP branches
- Two steps:
  - *Trace Selection*
    - » Find likely sequence of basic blocks (*trace*) of (statically predicted or profile predicted) long sequence of straight-line code
  - *Trace Compaction*
    - » Squeeze trace into few VLIW instructions
    - » Need bookkeeping code in case prediction is wrong

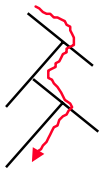

- Compiler undoes bad guess (discards values in registers)
- Subtle compiler bugs mean wrong answer vs. pooer performance; no hardware interlocks

Advantages of HW (Tomasulo) vs. SW (VLIW) Speculation

- HW determines address conflicts
- HW better branch prediction
- HW maintains precise exception model
- HW does not execute bookkeeping instructions
- Works across multiple implementations
- SW speculation is much easier for HW design

Superscalar v. VLIW

- Smaller code size
- Binary compatability across generations of hardware
- Simplified Hardware for decoding, issuing instructions
- No Interlock Hardware (compiler checks?)
- More registers, but simplified Hardware for Register Ports (multiple independent register files?)

Intel/HP "Explicitly Parallel Instruction Computer (EPIC)"

- 3 Instructions in 128 bit "groups"; field determines if instructions dependent or independent
  - Smaller code size than old VLIW, larger than x86/RISC
  - Groups can be linked to show independence > 3 instr
- 64 integer registers + 64 floating point registers
  - Not separate filesper funcitonal unit as in old VLIW
- Hardware checks dependencies (interlocks => binary compatibility over time)
- Predicated execution (select 1 out of 64 1-bit flags) => 40% fewer mispredictions?
- IA-64 : name of instruction set architecture; EPIC is type
- Merced is name of first implementation (1999/2000?)
- LIW = EPIC?

Dynamic Scheduling in Superscalar

- Dependencies stop instruction issue
- Code compiler for old version will run poorly on newest version
  - May want code to vary based on version of architecture

Dynamic Scheduling in Superscalar

- How to issue two instructions and keep in-order instruction issue for Tomasulo?
  - Assume 1 integer + 1 floating point
  - 1 Tomasulo control for integer, 1 for floating point
- Issue 2X Clock Rate, so that issue remains in order
- Only FP loads might cause dependency between integer and FP issue:
  - Replace load reservation station with a load queue; operands must be read in the order they are fetched
  - Load checks addresses in Store Queue to avoid RAW violation
  - Store checks addresses in Load Queue to avoid WAR,WAW
  - Called "decoupled architecture"

Performance of Dynamic SS

Iteration no.	*Instructions*	*Issues*	*Executes*	*Writes result*
			clock-cycle number	
1	LD F0,0(R1)	1	2	4
1	ADDD F4,F0,F2	1	5	8
1	SD 0(R1),F4	2	9	
1	SUBI R1,R1,#8	3	4	5
1	BNEZ R1,LOOP	4	5	
2	LD F0,0(R1)	5	6	8
2	ADDD F4,F0,F2	5	9	12
2	SD 0(R1),F4	6	13	
2	SUBI R1,R1,#8	7	8	9
2	BNEZ R1,LOOP	8	9	

- 4 clocks per iteration; only 1 FP instr/iteration

Branches, Decrements issues still take 1 clock cycle

How get more performance?

Software Pipelining

- Observation: if iterations from loops are independent, then can get more ILP by taking instructions from different iterations
- Software pipelining: reorganizes loops so that each iteration is made from instructions chosen from different iterations of the original loop (- Tomasulo in SW)

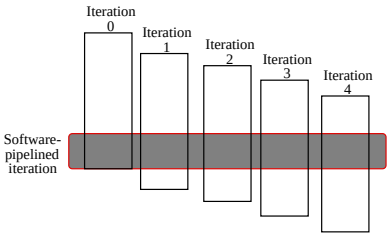

Software Pipelining Example

Before: Unrolled 3 times

```
1  LD    F0,0(R1)
2  ADDD  F4,F0,F2
3  SD    0(R1),F4
4  LD    F6,-8(R1)
5  ADDD  F8,F6,F2
6  SD    -8(R1),F8
7  LD    F10,-16(R1)
8  ADDD  F12,F10,F2
9  SD    -16(R1),F12
10 SUBI  R1,R1,#24
11 BNEZ  R1,LOOP
```

After: Software Pipelined

```
1  SD    0(R1),F4 ; Stores M[i]
2  ADDD  F4,F0,F2 ; Adds to M[i-1]
3  LD    F0,-16(R1); Loads M[i-2]
4  SUBI  R1,R1,#8
5  BNEZ  R1,LOOP
```

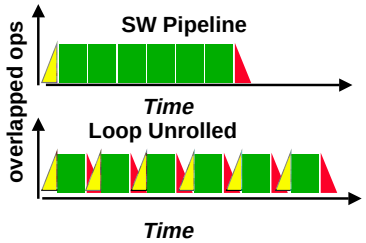

- Symbolic Loop Unrolling
  - Maximize result-use distance
  - Less code space than unrolling
  - Fill & drain pipe only once per loop vs. once per each unrolled iteration in loop unrolling

Limits to Multi-Issue Machines

- Inherent limitations of ILP
  - 1 branch in 5: How to keep a 5-way VLIW busy?
  - Latencies of units: many operations must be scheduled
  - Need about Pipeline Depth x No. Functional Units of independentDifficulties in building HW
  - Easy: More instruction bandwidth
  - Easy: Duplicate FUs to get parallel execution
  - Hard: Increase ports to Register File (bandwidth)
    - » VLIW example needs 7 read and 3 write for Int. Reg. & 5 read and 3 write for FP reg
  - Harder: Increase ports to memory (bandwidth)
  - Decoding Superscalar and impact on clock rate, pipeline depth?

Limits to Multi-Issue Machines

- Limitations specific to either Superscalar or VLIW implementation
  - Decode issue in Superscalar: how wide practical?
  - VLIW code size: unroll loops + wasted fields in VLIW
    - » IA-64 compresses dependent instructions, but still larger
  - VLIW lock step => 1 hazard & all instructions stall
    - » IA-64 not lock step? Dynamic pipeline?
  - VLIW & binary compatibilityIA-64 promises binary compatibility

Limits to ILP

- Conflicting studies of amount
  - Benchmarks (vectorized Fortran FP vs. integer C programs)
  - Hardware sophistication
  - Compiler sophistication
- How much ILP is available using existing mechanims with increasing HW budgets?
- Do we need to invent new HW/SW mechanisms to keep on processor performance curve?

Limits to ILP

Initial HW Model here; MIPS compilers.

Assumptions for ideal/perfect machine to start:

1. *Register renaming*–infinite virtual registers and all WAW & WAR hazards are avoided
2. *Branch prediction*–perfect; no mispredictions
3. *Jump prediction*–all jumps perfectly predicted => machine with perfect speculation & an unbounded buffer of instructions available
4. *Memory-address alias analysis*–addresses are known & a store can be moved before a load provided addresses not equal

1 cycle latency for all instructions; unlimited number of instructions issued per clock cycle

Upper Limit to ILP: Ideal Machine

(Figure 4.38, page 319)

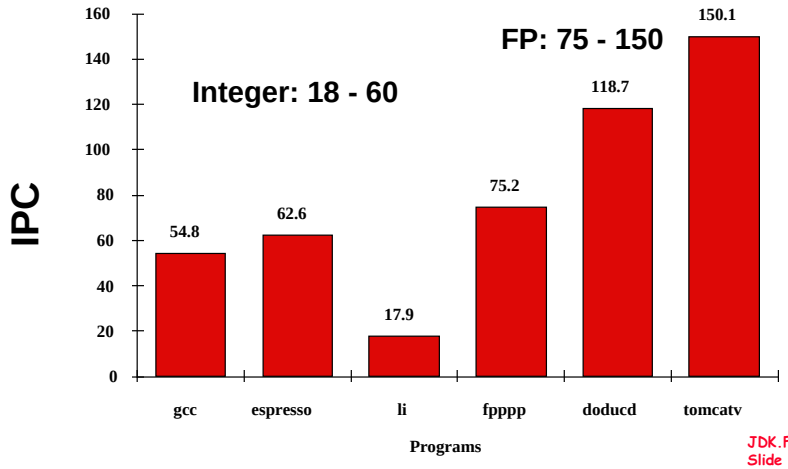

More Realistic HW: Branch Impact

Figure 4.40, Page 323

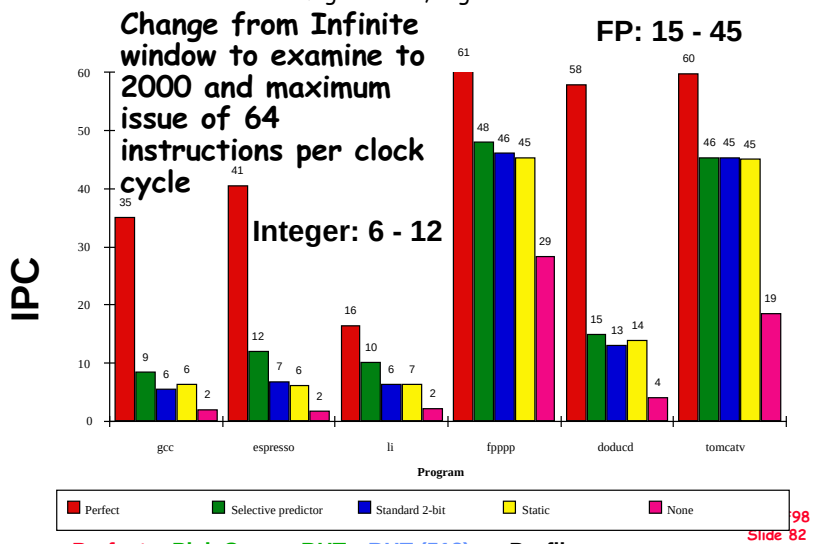

Perfect Pick Cor. or BHT BHT (512) Profile No prediction

More Realistic HW: Register Impact

Figure 4.44, Page 328

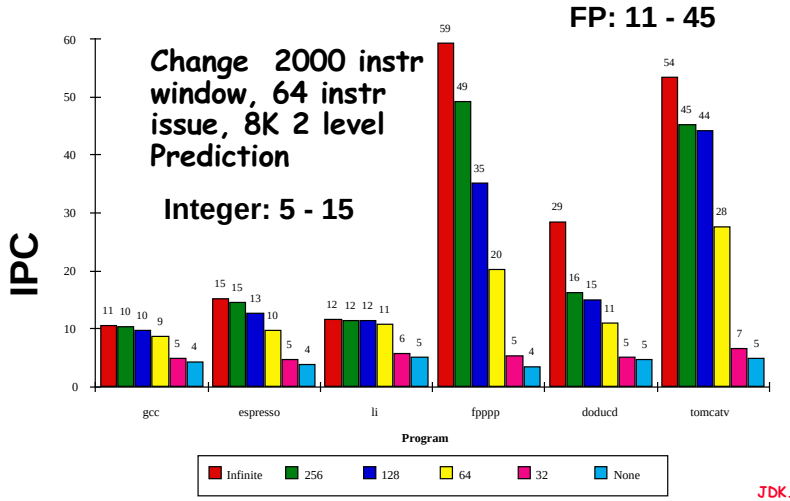

Infinite 256 128 64 32 None

More Realistic HW: Alias Impact

Figure 4.46, Page 330

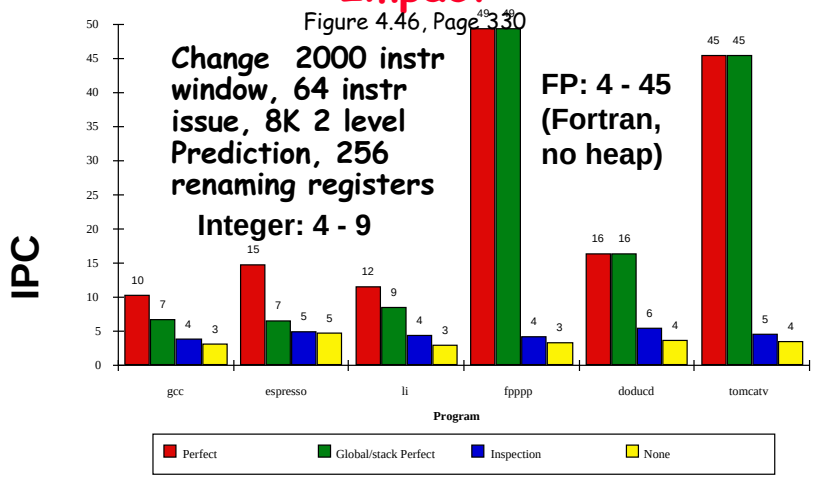

Perfect Global/Stack perf; heap conflicts Inspec. Assem. None

Realistic HW for '9X: Window Impact

(Figure 4.48, Page 332)

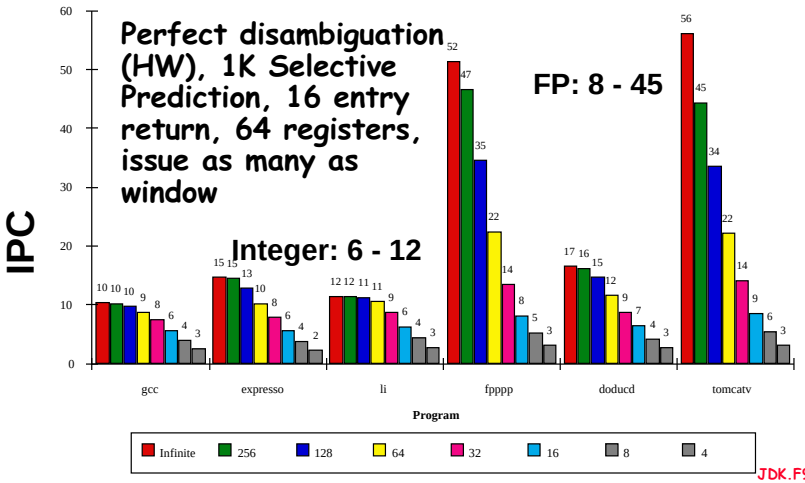

Infinite 256 128 64 32 16 8 4

JDK.F98
Slide 85

Braniac vs. Speed Demon(1993)

- 8-scalar IBM Power-2 @ 71.5 MHz (5 stage pipe)

vs. 2-scalar Alpha @ 200 MHz (7 stage pipe)

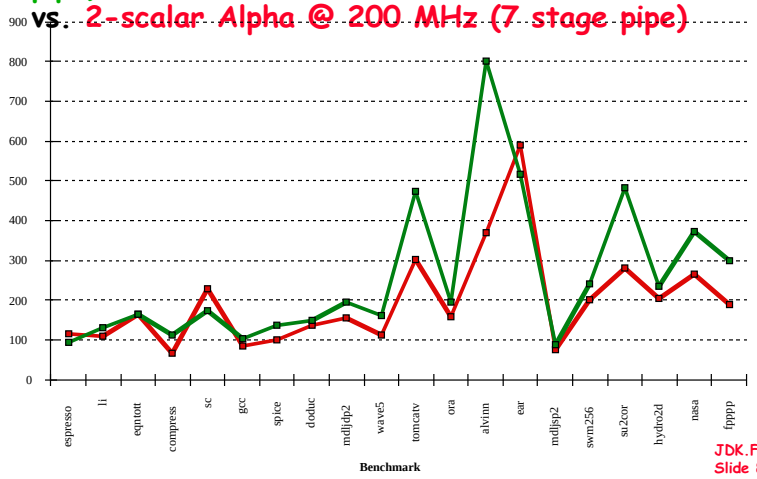

JDK.F98
Slide 86

3 1996 Era Machines

	Alpha 21164	PPro	HP PA-8000
Year	1995	1995	1996
Clock	400 MHz	200 MHz	180 MHz
Cache	8K/8K/96K/2M	8K/8K/0.5M	0/0/2M
Issue rate	2int+2FP	3 instr (x86)	4 instr
Pipe stages	7-9	12-14	7-9
Out-of-Order6 loads		40 instr (µop)	56 instr
Rename regs	none	40	56

JDK.F98
Slide 87

SPECint95base Performance (July 1996)

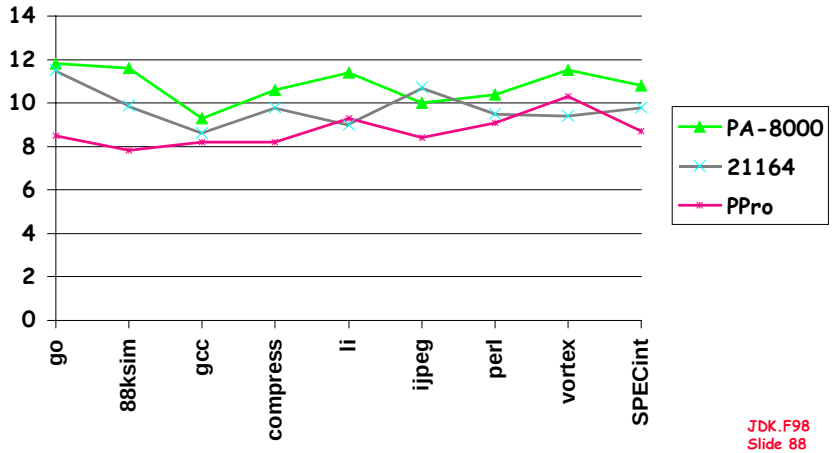

JDK.F98
Slide 88

SPECfp95base Performance (July 1996)

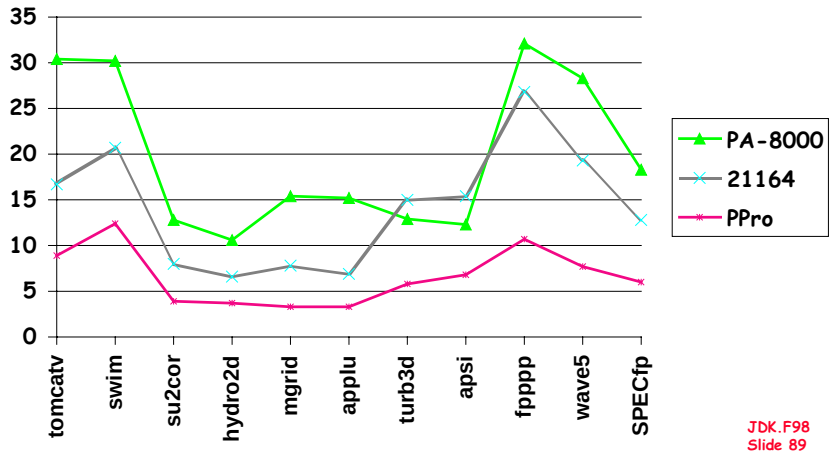

3 1997 Era Machines

	Alpha 21164	Pentium II	HP PA-8000
Year	1995	1996	1996
Clock	600 MHz ('97)	300 MHz ('97)	236 MHz ('97)
Cache	8K/8K/96K/2M	16K/16K/0.5M	0/0/4M
Issue rate	2int+2FP	3 instr (x86)	4 instr
Pipe stages	7-9	12-14	7-9
Out-of-Order	6 loads	40 instr (μop)	56 instr
Rename regs	none	40	56

SPECint95base Performance (Oct. 1997)

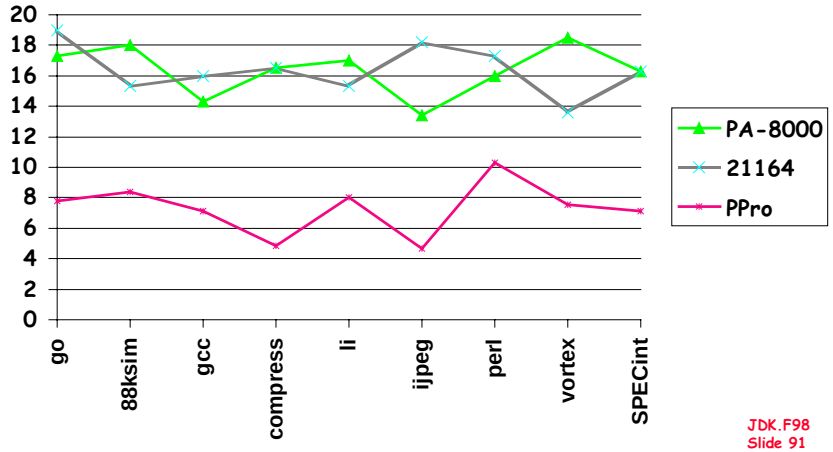

SPECfp95base Performance (Oct. 1997)

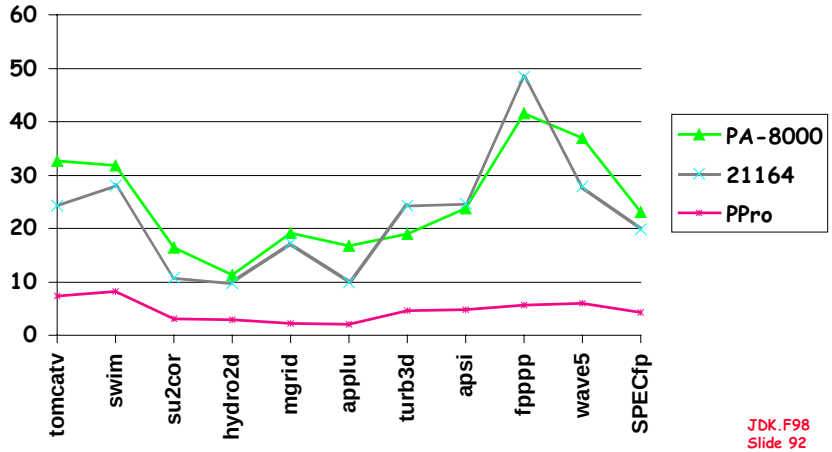

Summary

- Dynamic hardware schemes can unroll loops dynamically in hardware
- Explicit Renaming: more physical registers than needed by ISA. Uses a translation table
- Precise exceptions/Speculation: Out-of-order execution, In-order commit (reorder buffer)
- Superscalar and VLIW: CPI < 1 (IPC > 1)
  - Dynamic issue vs. Static issue
  - More instructions issue at same time => larger hazard penalty
- SW Pipelining
  - Symbolic Loop Unrolling to get most from pipeline with little code expansion, little overhead