CS152
Computer Architecture and Engineering
Lecture 15

Dynamic Scheduling

March 29, 1999

John Kubiatowicz (http.cs.berkeley.edu/~kubitron)

lecture slides: http://www-inst.eecs.berkeley.edu/~cs152/

Review: The exception problem in simple pipeline

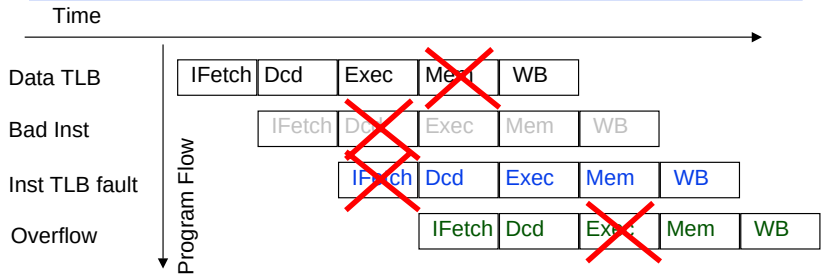

- **Use pipeline to sort this out!**
  - Pass exception status along with instruction.
  - Keep track of PCs for every instruction in pipeline.
  - Don't act on exception until it reache WB stage
- **Handle interrupts through "faulting noop" in IF stage**
- **When instruction reaches WB stage:**
  - Save PC ⇒ EPC, Interrupt vector addr ⇒ PC
  - Turn all instructions in earlier stages into noops!

Review: Compiler Scheduling

- **For single-issue machine, CPI >= 1**
  - With longer instructions, CPI often > 1
  - Example: R4000, floating point ops > 8 cycles execution!
- **Careful compiler scheduling can remove stalls and speed up code. Dependencies must be maintained.**
- **Loop unrolling can offer additional parallelism.**

Review: FP Loop Showing Stalls

```
1 Loop: LD    F0,0(R1)   ;F0=vector element
2       stall
3       ADDD  F4,F0,F2   ;add scalar in F2
4       stall
5       stall
6       SD    0(R1),F4   ;store result
7       SUBI  R1,R1,8    ;decrement pointer 8B (DW)
8       BNEZ  R1,Loop    ;branch R1!=zero
9       stall            ;delayed branch slot
```

Instruction producing result	*Instruction using result*	*Latency in clock cycles*
FP ALU op	Another FP ALU op	3
FP ALU op	Store double	2
Load double	FP ALU op	1

- **9 clocks: Rewrite code to minimize stalls?**

Review: Unrolled Loop That Minimizes Stalls

```
1 Loop: LD     F0,0(R1)
2       LD     F6,-8(R1)
3       LD     F10,-16(R1)
4       LD     F14,-24(R1)
5       ADDD   F4,F0,F2
6       ADDD   F8,F6,F2
7       ADDD   F12,F10,F2
8       ADDD   F16,F14,F2
9       SD     0(R1),F4
10      SD     -8(R1),F8
11      SD     -16(R1),F12
12      SUBI   R1,R1,#32
13      BNEZ   R1,LOOP
14      SD     8(R1),F16     ; 8-32 = -24
```

- **What assumptions made when moved code?**
  - OK to move store past SUBI even though changes register
  - OK to move loads before stores: get right data?
  - When is it safe for compiler to do such changes?

14 clock cycles, or 3.5 per iteration

Used new registers => register renaming!

Review: Getting CPI < 1: Issuing Multiple Instructions/Cycle

- **Superscalar MIPS: 2 instructions, 1 FP & 1 anything else**
  - Fetch 64-bits/clock cycle; Int on left, FP on right
  - Can only issue 2nd instruction if 1st instruction issues
  - More ports for FP registers to do FP load & FP op in a pair

Type	*PipeStages*				
Int. instruction	IF	ID	EX	MEM	WB
FP instruction	IF	ID	EX	MEM	WB
Int. instruction		IF	ID	EX	MEM	WB
FP instruction		IF	ID	EX	MEM	WB
Int. instruction			IF	ID	EX	MEM	WB
FP instruction			IF	ID	EX	MEM	WB

- **1 cycle load delay expands to 3 instructions in SS**
  - instruction in right half can't use it, nor instructions in next slot

Review: Loop Unrolling in Superscalar

	Integer instruction	*FP instruction*	*Clock cycle*
Loop:	LD F0,0(R1)		1
	LD F6,-8(R1)		2
	LD F10,-16(R1)	ADDD F4,F0,F2	3
	LD F14,-24(R1)	ADDD F8,F6,F2	4
	LD F18,-32(R1)	ADDD F12,F10,F2	5
	SD 0(R1),F4	ADDD F16,F14,F2	6
	SD -8(R1),F8	ADDD F20,F18,F2	7
	SD -16(R1),F12		8
	SD -24(R1),F16		9
	SUBI R1,R1,#40		10
	BNEZ R1,LOOP		11
	SD -32(R1),F20		12

- **Unrolled 5 times to avoid delays (+1 due to SS)**
- **12 clocks, or 2.4 clocks per iteration**

Today's schedule

- **Finish up with software (compiler) techniques to improve performance**
  - Brief discussion of VLIW
- **Advanced techniques discussion of Dynamic scheduling: Assume single-issue!**
  - Scoreboard
  - Tomasulo
- **Next-time see what this really means for multiple issue.**

Limits of Superscalar

- While Integer/FP split is simple for the HW, get CPI of 0.5 only for programs with:
  - Exactly 50% FP operations
  - No hazards
- If more instructions issue at same time, greater difficulty of decode and issue
  - Even 2-scalar => examine 2 opcodes, 6 register specifiers, & decide if 1 or 2 instructions can issue
- VLIW: tradeoff instruction space for simple decoding
  - The long instruction word has room for many operations
  - By definition, all the operations the compiler puts in the long instruction word can execute in parallel
  - E.g., 2 integer operations, 2 FP ops, 2 Memory refs, 1 branch
    - » 16 to 24 bits per field => 7*16 or 112 bits to 7*24 or 168 bits wide
  - Need compiling technique that schedules across several branches

Loop Unrolling in VLIW

Memory reference 1	*Memory reference 2*	*FP operation 1*	*FP op. 2*	*Int. op/ branch*	*Clock*
LD F0,0(R1)	LD F6,-8(R1)				1
LD F10,-16(R1)	LD F14,-24(R1)				2
LD F18,-32(R1)	LD F22,-40(R1)	ADDD F4,F0,F2	ADDD F8,F6,F2		3
LD F26,-48(R1)		ADDD F12,F10,F2	ADDD F16,F14,F2		4
		ADDD F20,F18,F2	ADDD F24,F22,F2		5
SD 0(R1),F4	SD -8(R1),F8	ADDD F28,F26,F2			6
SD -16(R1),F12	SD -24(R1),F16				7
SD -32(R1),F20	SD -40(R1),F24			SUBI R1,R1,#48	8
SD -0(R1),F28				BNEZ R1,LOOP	9

Unrolled 7 times to avoid delays

7 results in 9 clocks, or 1.3 clocks per iteration

Need more registers in VLIW(EPIC => 128int + 128FP)

Software Pipelining

- Observation: if iterations from loops are independent, then can get more ILP by taking instructions from different iterations
- Software pipelining: reorganizes loops so that each iteration is made from instructions chosen from different iterations of the original loop (- Tomasulo in SW)

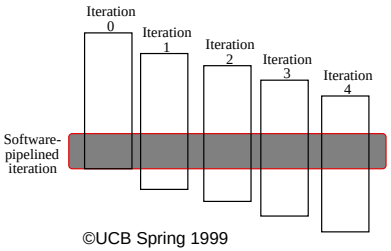

Software Pipelining Example

Before: Unrolled 3 times

```
1  LD    F0,0(R1)
2  ADDD  F4,F0,F2
3  SD    0(R1),F4
4  LD    F6,-8(R1)
5  ADDD  F8,F6,F2
6  SD    -8(R1),F8
7  LD    F10,-16(R1)
8  ADDD  F12,F10,F2
9  SD    -16(R1),F12
10 SUBI  R1,R1,#24
11 BNEZ  R1,LOOP
```

After: Software Pipelined

```
1  SD    0(R1),F4 ; Stores M[i]
2  ADDD  F4,F0,F2 ; Adds to M[i-1]
3  LD    F0,-16(R1); Loads M[i-2]
4  SUBI  R1,R1,#8
5  BNEZ  R1,LOOP
```

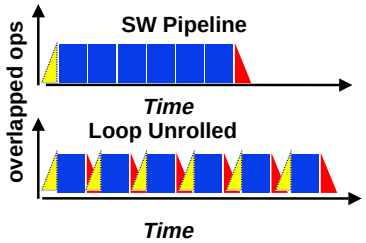

- Symbolic Loop Unrolling
  - Maximize result-use distance
  - Less code space than unrolling
  - Fill & drain pipe only once per loop vs. once per each unrolled iteration in loop unrolling

Software Pipelining with Loop Unrolling in VLIW

Memory reference 1	*Memory reference 2*	*FP operation 1*	*FP op. 2*	*Int. op/ branch*	*Clock*
LD F0,-48(R1)	ST 0(R1),F4	ADDD F4,F0,F2			1
LD F6,-56(R1)	ST -8(R1),F8	ADDD F8,F6,F2		SUBI R1,R1,#24	2
LD F10,-40(R1)	ST 8(R1),F12	ADDD F12,F10,F2		BNEZ R1,LOOP	3

- **Software pipelined across 9 iterations of original loop**
  - In each iteration of above loop, we:
    - » Store to m,m-8,m-16 (iterations I-3,I-2,I-1)
    - » Compute for m-24,m-32,m-40 (iterations I,I+1,I+2)
    - » Load from m-48,m-56,m-64 (iterations I+3,I+4,I+5)
- **9 results in 9 cycles, or 1 clock per iteration**
- **Average: 3.3 ops per clock, 66% efficiency**

Note: Need less registers for software pipelining
(only using 7 registers here, was using 15)

Trace Scheduling

- **Parallelism across IF branches vs. LOOP branches**
- **Two steps:**
  - *Trace Selection*
    - » Find likely sequence of basic blocks (*trace*) of (statically predicted or profile predicted) long sequence of straight-line code
  - *Trace Compaction*
    - » Squeeze trace into few VLIW instructions
    - » Need bookkeeping code in case prediction is wrong

- **Compiler undoes bad guess (discards values in registers)**
- **Subtle compiler bugs mean wrong answer vs. poor performance; no hardware interlocks**

Administrivia

- **Dynamic scheduling techniques discussed in the Other Hennessy & Patterson book:**
  - "Computer Architecture: A Quantitative Approach"
  - Chapter 4
- **Lab 5 due next Monday (4/5) at 12 noon.**
- **Get moving!**

Can we use HW to get CPI closer to 1?

- **Why in HW at run time?**
  - Works when can't know real dependence at compile time
  - Compiler simpler
  - Code for one machine runs well on another
- **Key idea: Allow instructions behind stall to proceed**

```
DIVD  F0,F2,F4
ADDD  F10,F0,F8
SUBD  F12,F8,F14
```

- **Out-of-order execution => out-of-order completion.**
- **Disadvantages?**
  - Complexity
  - Precise interrupts harder! (Talk about this next time)

Problems?

- How do we prevent WAR and WAW hazards?
- How do we deal with variable latency?
  - Forwarding for RAW hazards harder.

Instruction	Clock Cycle Number																
	1	2	3	4	5	6	7	8	9	10	11	12	13	14	15	16	17
LD F6,34(R2)	IF	ID	EX	MEM	WB												
LD F2,45(R3)		IF	ID	EX	MEM	WB											
MULTD F0,F2,F4			IF	ID	stall	M1	M2	M3	M4	M5	M6	M7	M8	M9	M10	MEM	WB
SUBD F8,F6,F2				IF	ID	A1	A2	MEM	WB								
DIVD F10,F0,F6					IF	ID	stall	stall	stall	stall	stall	stall	stall	stall	stall	D1	D2
ADDD F6,F8,F2						IF	ID	A1	A2	MEM	WB						

RAW

WAR

Scoreboard: a bookkeeping technique

- Out-of-order execution divides ID stage:
  1. Issue—decode instructions, check for structural hazards
  2. Read operands—wait until no data hazards, then read operands
- Scoreboards date to CDC6600 in 1963
- Instructions execute whenever not dependent on previous instructions and no hazards.
- CDC 6600: In order issue, out-of-order execution, out-of-order commit (or completion)
  - No forwarding!
  - Imprecise interrupt/exception model for now

Scoreboard Architecture(CDC 6600)

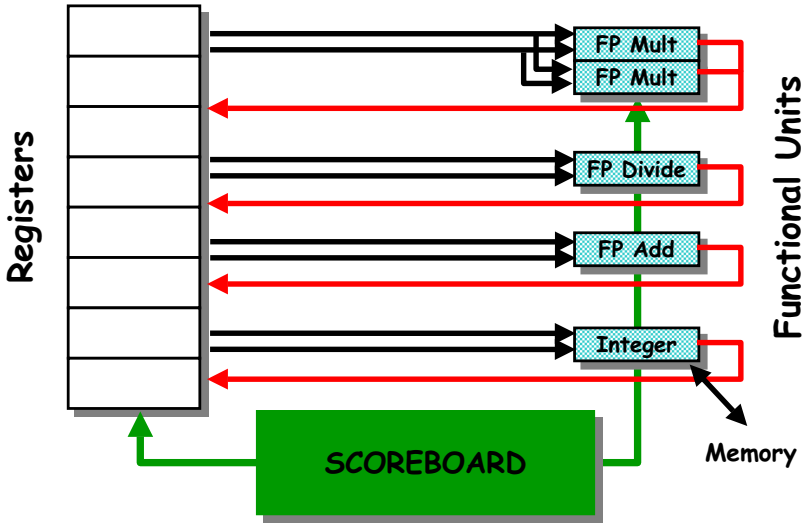

Scoreboard Implications

- Out-of-order completion => WAR, WAW hazards?
- Solutions for WAR:
  - Stall writeback until registers have been read
  - Read registers only during Read Operands stage
- Solution for WAW:
  - Detect hazard and stall issue of new instruction until other instruction completes
- No register renaming!
- Need to have multiple instructions in execution phase => multiple execution units or pipelined execution units
- Scoreboard keeps track of dependencies between instructions that have already issued.
- Scoreboard replaces ID, EX, WB with 4 stages

Four Stages of Scoreboard Control

- **Issue—decode instructions & check for structural hazards (ID1)**
  - Instructions issued in program order (for hazard checking)
  - Don't issue if structural hazard
  - Don't issue if instruction is output dependent on any previously issued but uncompleted instruction (no WAW hazards)
- **Read operands—wait until no data hazards, then read operands (ID2)**
  - All real dependencies (RAW hazards) resolved in this stage, since we wait for instructions to write back data.
  - No forwarding of data in this model!

Four Stages of Scoreboard Control

- **Execution—operate on operands (EX)**
  - The functional unit begins execution upon receiving operands. When the result is ready, it notifies the scoreboard that it has completed execution.
- **Write result—finish execution (WB)**
  - Stall until no WAR hazards with previous instructions:

Example:

```
DIVD   F0,F2,F4
ADDD   F10,F0,F8
SUBD   F8,F8,F14
```

CDC 6600 scoreboard would stall SUBD until ADDD reads operands

Three Parts of the Scoreboard

- **Instruction status:**
  Which of 4 steps the instruction is in
- **Functional unit status:—Indicates the state of the functional unit (FU). 9 fields for each functional unit**
  - Busy: Indicates whether the unit is busy or not
  - Op: Operation to perform in the unit (e.g., + or –)
  - Fi: Destination register
  - Fj,Fk: Source-register numbers
  - Qj,Qk: Functional units producing source registers Fj, Fk
  - Rj,Rk: Flags indicating when Fj, Fk are ready
- **Register result status—Indicates which functional unit will write each register, if one exists. Blank when no pending instructions will write that register**

Scoreboard Example

Instruction status:

Instruction		j	k	Issue	Read Oper	Exec Comp	Write Result
LD	F6	34+	R2				
LD	F2	45+	R3				
MULTD	F0	F2	F4				
SUBD	F8	F6	F2				
DIVD	F10	F0	F6				
ADDD	F6	F8	F2				

Functional unit status:

Time	Name	Busy	Op	dest Fi	S1 Fj	S2 Fk	FU Qj	FU Qk	Fj? Rj	Fk? Rk
	Integer	No								
	Mult1	No								
	Mult2	No								
	Add	No								
	Divide	No								

Register result status:

Clock	F0	F2	F4	F6	F8	F10	F12	...	F30
FU									

Detailed Scoreboard Pipeline Control

Instruction status	Wait until	Bookkeeping
Issue	Not busy (FU) and not result(D)	Busy(FU)← yes; Op(FU)← op; Fi(FU)← `D'; Fj(FU)← `S1'; Fk(FU)← `S2'; Qj← Result(`S1'); Qk← Result(`S2'); Rj← not Qj; Rk← not Qk; Result(`D')← FU;
Read operands	Rj and Rk	Rj← No; Rk← No
Execution complete	Functional unit done	
Write result	∀f((Fj(f)" Fi(FU) or Rj(f)=No) & (Fk(f) " Fi(FU) or Rk(f)=No))	∀f(if Qj(f)=FU then Rj(f)← Yes); ∀f(if Qk(f)=FU then Rj(f)← Yes); Result(Fi(FU))← 0; Busy(FU)← No

Scoreboard Example: Cycle 1

Instruction status:

Instruction		j	k	Issue	Read Oper	Exec Comp	Write Result
LD	F6	34+	R2	1			
LD	F2	45+	R3				
MULTD	F0	F2	F4				
SUBD	F8	F6	F2				
DIVD	F10	F0	F6				
ADDD	F6	F8	F2				

Functional unit status:

Time	Name	Busy	Op	dest Fi	S1 Fj	S2 Fk	FU Qj	FU Qk	Fj? Rj	Fk? Rk
	Integer	Yes	Load	F6		R2				Yes
	Mult1	No								
	Mult2	No								
	Add	No								
	Divide	No								

Register result status:

Clock		F0	F2	F4	F6	F8	F10	F12	...	F30
1	FU				Integer					

Scoreboard Example: Cycle 2

Instruction status:

Instruction		j	k	Issue	Read Oper	Exec Comp	Write Result
LD	F6	34+	R2	1	2		
LD	F2	45+	R3				
MULTD	F0	F2	F4				
SUBD	F8	F6	F2				
DIVD	F10	F0	F6				
ADDD	F6	F8	F2				

Functional unit status:

Time	Name	Busy	Op	dest Fi	S1 Fj	S2 Fk	FU Qj	FU Qk	Fj? Rj	Fk? Rk
	Integer	Yes	Load	F6		R2				Yes
	Mult1	No								
	Mult2	No								
	Add	No								
	Divide	No								

Register result status:

Clock		F0	F2	F4	F6	F8	F10	F12	...	F30
2	FU				Integer					

- **Issue 2nd LD?**

Scoreboard Example: Cycle 3

Instruction status:

Instruction		j	k	Issue	Read Oper	Exec Comp	Write Result
LD	F6	34+	R2	1	2	3	
LD	F2	45+	R3				
MULTD	F0	F2	F4				
SUBD	F8	F6	F2				
DIVD	F10	F0	F6				
ADDD	F6	F8	F2				

Functional unit status:

Time	Name	Busy	Op	dest Fi	S1 Fj	S2 Fk	FU Qj	FU Qk	Fj? Rj	Fk? Rk
	Integer	Yes	Load	F6		R2				No
	Mult1	No								
	Mult2	No								
	Add	No								
	Divide	No								

Register result status:

Clock		F0	F2	F4	F6	F8	F10	F12	...	F30
3	FU				Integer					

- **Issue MULT?**

Scoreboard Example: Cycle 4

Instruction status:

Instruction	j	k	Issue	Read Oper	Exec Comp	Write Result
LD	F6	34+ R2	1	2	3	4
LD	F2	45+ R3				
MULTD	F0	F2 F4				
SUBD	F8	F6 F2				
DIVD	F10	F0 F6				
ADDD	F6	F8 F2				

Functional unit status:

Time	Name	Busy	Op	dest Fi	S1 Fj	S2 Fk	FU Qj	FU Qk	Fj? Rj	Fk? Rk
	Integer	No								
	Mult1	No								
	Mult2	No								
	Add	No								
	Divide	No								

Register result status:

Clock		F0	F2	F4	F6	F8	F10	F12	...	F30
4	FU				Integer					

Scoreboard Example: Cycle 5

Instruction status:

Instruction	j	k	Issue	Read Oper	Exec Comp	Write Result
LD	F6	34+ R2	1	2	3	4
LD	F2	45+ R3	5			
MULTD	F0	F2 F4				
SUBD	F8	F6 F2				
DIVD	F10	F0 F6				
ADDD	F6	F8 F2				

Functional unit status:

Time	Name	Busy	Op	dest Fi	S1 Fj	S2 Fk	FU Qj	FU Qk	Fj? Rj	Fk? Rk
	Integer	Yes	Load	F2		R3				Yes
	Mult1	No								
	Mult2	No								
	Add	No								
	Divide	No								

Register result status:

Clock		F0	F2	F4	F6	F8	F10	F12	...	F30
5	FU		Integer							

Scoreboard Example: Cycle 6

Instruction status:

Instruction	j	k	Issue	Read Oper	Exec Comp	Write Result
LD	F6	34+ R2	1	2	3	4
LD	F2	45+ R3	5	6		
MULTD	F0	F2 F4	6			
SUBD	F8	F6 F2				
DIVD	F10	F0 F6				
ADDD	F6	F8 F2				

Functional unit status:

Time	Name	Busy	Op	dest Fi	S1 Fj	S2 Fk	FU Qj	FU Qk	Fj? Rj	Fk? Rk
	Integer	Yes	Load	F2		R3				Yes
	Mult1	Yes	Mult	F0	F2	F4	Integer		No	Yes
	Mult2	No								
	Add	No								
	Divide	No								

Register result status:

Clock		F0	F2	F4	F6	F8	F10	F12	...	F30
6	FU	Mult1	Integer							

Scoreboard Example: Cycle 7

Instruction status:

Instruction	j	k	Issue	Read Oper	Exec Comp	Write Result
LD	F6	34+ R2	1	2	3	4
LD	F2	45+ R3	5	6	7	
MULTD	F0	F2 F4	6			
SUBD	F8	F6 F2	7			
DIVD	F10	F0 F6				
ADDD	F6	F8 F2				

Functional unit status:

Time	Name	Busy	Op	dest Fi	S1 Fj	S2 Fk	FU Qj	FU Qk	Fj? Rj	Fk? Rk
	Integer	Yes	Load	F2		R3				No
	Mult1	Yes	Mult	F0	F2	F4	Integer		No	Yes
	Mult2	No								
	Add	Yes	Sub	F8	F6	F2		Integer	Yes	No
	Divide	No								

Register result status:

Clock		F0	F2	F4	F6	F8	F10	F12	...	F30
7	FU	Mult1	Integer			Add				

- **Read multiply operands?**

Scoreboard Example: Cycle 8a
(First half of clock cycle)

Instruction status:

Instruction	j	k	Issue	Read Oper	Exec Comp	Write Result
LD	F6	34+ R2	1	2	3	4
LD	F2	45+ R3	5	6	7	
MULTD	F0	F2 F4	6			
SUBD	F8	F6 F2	7			
DIVD	F10	F0 F6	8			
ADDD	F6	F8 F2				

Functional unit status:

Time	Name	Busy	Op	dest Fi	S1 Fj	S2 Fk	FU Qj	FU Qk	Fj? Rj	Fk? Rk
	Integer	Yes	Load	F2		R3				No
	Mult1	Yes	Mult	F0	F2	F4	Integer		No	Yes
	Mult2	No								
	Add	Yes	Sub	F8	F6	F2		Integer	Yes	No
	Divide	Yes	Div	F10	F0	F6	Mult1		No	Yes

Register result status:

Clock		F0	F2	F4	F6	F8	F10	F12	...	F30
8	FU	Mult1	Integer			Add	Divide			

Scoreboard Example: Cycle 8b (Second half of clock cycle)

Instruction status:

Instruction	j	k	Issue	Read Oper	Exec Comp	Write Result
LD	F6	34+ R2	1	2	3	4
LD	F2	45+ R3	5	6	7	8
MULTD	F0	F2 F4	6			
SUBD	F8	F6 F2	7			
DIVD	F10	F0 F6	8			
ADDD	F6	F8 F2				

Functional unit status:

Time	Name	Busy	Op	dest Fi	S1 Fj	S2 Fk	FU Qj	FU Qk	Fj? Rj	Fk? Rk
	Integer	No								
	Mult1	Yes	Mult	F0	F2	F4			Yes	Yes
	Mult2	No								
	Add	Yes	Sub	F8	F6	F2			Yes	Yes
	Divide	Yes	Div	F10	F0	F6	Mult1		No	Yes

Register result status:

Clock		F0	F2	F4	F6	F8	F10	F12	...	F30
8	FU	Mult1				Add	Divide			

Scoreboard Example: Cycle 9

Instruction status:

Instruction	j	k	Issue	Read Oper	Exec Comp	Write Result
LD	F6	34+ R2	1	2	3	4
LD	F2	45+ R3	5	6	7	8
MULTD	F0	F2 F4	6	9		
SUBD	F8	F6 F2	7	9		
DIVD	F10	F0 F6	8			
ADDD	F6	F8 F2				

Functional unit status:

Note Remaining

Time	Name	Busy	Op	dest Fi	S1 Fj	S2 Fk	FU Qj	FU Qk	Fj? Rj	Fk? Rk
	Integer	No								
10	Mult1	Yes	Mult	F0	F2	F4			Yes	Yes
	Mult2	No								
2	Add	Yes	Sub	F8	F6	F2			Yes	Yes
	Divide	Yes	Div	F10	F0	F6	Mult1		No	Yes

Register result status:

Clock		F0	F2	F4	F6	F8	F10	F12	...	F30
9	FU	Mult1				Add	Divide			

- **Read operands for MULT & SUB? Issue ADDD?**

Scoreboard Example: Cycle 10

Instruction status:

Instruction	j	k	Issue	Read Oper	Exec Comp	Write Result
LD	F6	34+ R2	1	2	3	4
LD	F2	45+ R3	5	6	7	8
MULTD	F0	F2 F4	6	9		
SUBD	F8	F6 F2	7	9		
DIVD	F10	F0 F6	8			
ADDD	F6	F8 F2				

Functional unit status:

Time	Name	Busy	Op	dest Fi	S1 Fj	S2 Fk	FU Qj	FU Qk	Fj? Rj	Fk? Rk
	Integer	No								
9	Mult1	Yes	Mult	F0	F2	F4			No	No
	Mult2	No								
1	Add	Yes	Sub	F8	F6	F2			No	No
	Divide	Yes	Div	F10	F0	F6	Mult1		No	Yes

Register result status:

Clock		F0	F2	F4	F6	F8	F10	F12	...	F30
10	FU	Mult1				Add	Divide			

Scoreboard Example: Cycle 11

Instruction status:

Instruction		j	k	Issue	Read Oper	Exec Comp	Write Result
LD	F6	34+	R2	1	2	3	4
LD	F2	45+	R3	5	6	7	8
MULTD	F0	F2	F4	6	9		
SUBD	F8	F6	F2	7	9	11	
DIVD	F10	F0	F6	8			
ADDD	F6	F8	F2				

Functional unit status:

Time	Name	Busy	Op	dest Fi	S1 Fj	S2 Fk	FU Qj	FU Qk	Fj? Rj	Fk? Rk
	Integer	No								
8	Mult1	Yes	Mult	F0	F2	F4			No	No
	Mult2	No								
0	Add	Yes	Sub	F8	F6	F2			No	No
	Divide	Yes	Div	F10	F0	F6	Mult1		No	Yes

Register result status:

Clock		F0	F2	F4	F6	F8	F10	F12	...	F30
11	FU	Mult1				Add	Divide			

Scoreboard Example: Cycle 12

Instruction status:

Instruction		j	k	Issue	Read Oper	Exec Comp	Write Result
LD	F6	34+	R2	1	2	3	4
LD	F2	45+	R3	5	6	7	8
MULTD	F0	F2	F4	6	9		
SUBD	F8	F6	F2	7	9	11	12
DIVD	F10	F0	F6	8			
ADDD	F6	F8	F2				

Functional unit status:

Time	Name	Busy	Op	dest Fi	S1 Fj	S2 Fk	FU Qj	FU Qk	Fj? Rj	Fk? Rk
	Integer	No								
7	Mult1	Yes	Mult	F0	F2	F4			No	No
	Mult2	No								
	Add	No								
	Divide	Yes	Div	F10	F0	F6	Mult1		No	Yes

Register result status:

Clock		F0	F2	F4	F6	F8	F10	F12	...	F30
12	FU	Mult1					Divide			

- **Read operands for DIVD?**

Scoreboard Example: Cycle 13

Instruction status:

Instruction		j	k	Issue	Read Oper	Exec Comp	Write Result
LD	F6	34+	R2	1	2	3	4
LD	F2	45+	R3	5	6	7	8
MULTD	F0	F2	F4	6	9		
SUBD	F8	F6	F2	7	9	11	12
DIVD	F10	F0	F6	8			
ADDD	F6	F8	F2	13			

Functional unit status:

Time	Name	Busy	Op	dest Fi	S1 Fj	S2 Fk	FU Qj	FU Qk	Fj? Rj	Fk? Rk
	Integer	No								
6	Mult1	Yes	Mult	F0	F2	F4			No	No
	Mult2	No								
	Add	Yes	Add	F6	F8	F2			Yes	Yes
	Divide	Yes	Div	F10	F0	F6	Mult1		No	Yes

Register result status:

Clock		F0	F2	F4	F6	F8	F10	F12	...	F30
13	FU	Mult1			Add		Divide			

Scoreboard Example: Cycle 14

Instruction status:

Instruction		j	k	Issue	Read Oper	Exec Comp	Write Result
LD	F6	34+	R2	1	2	3	4
LD	F2	45+	R3	5	6	7	8
MULTD	F0	F2	F4	6	9		
SUBD	F8	F6	F2	7	9	11	12
DIVD	F10	F0	F6	8			
ADDD	F6	F8	F2	13	14		

Functional unit status:

Time	Name	Busy	Op	dest Fi	S1 Fj	S2 Fk	FU Qj	FU Qk	Fj? Rj	Fk? Rk
	Integer	No								
5	Mult1	Yes	Mult	F0	F2	F4			No	No
	Mult2	No								
2	Add	Yes	Add	F6	F8	F2			Yes	Yes
	Divide	Yes	Div	F10	F0	F6	Mult1		No	Yes

Register result status:

Clock		F0	F2	F4	F6	F8	F10	F12	...	F30
14	FU	Mult1			Add		Divide			

Scoreboard Example: Cycle 15

Instruction status:

Instruction	j	k	Issue	Read Oper	Exec Comp	Write Result
LD	F6	34+ R2	1	2	3	4
LD	F2	45+ R3	5	6	7	8
MULTD	F0	F2 F4	6	9		
SUBD	F8	F6 F2	7	9	11	12
DIVD	F10	F0 F6	8			
ADDD	F6	F8 F2	13	14		

Functional unit status:

Time	Name	Busy	Op	dest Fi	S1 Fj	S2 Fk	FU Qj	FU Qk	Fj? Rj	Fk? Rk
	Integer	No								
4	Mult1	Yes	Mult	F0	F2	F4			No	No
	Mult2	No								
1	Add	Yes	Add	F6	F8	F2			No	No
	Divide	Yes	Div	F10	F0	F6	Mult1		No	Yes

Register result status:

Clock		F0	F2	F4	F6	F8	F10	F12	...	F30
15	FU	Mult1			Add		Divide			

Scoreboard Example: Cycle 16

Instruction status:

Instruction	j	k	Issue	Read Oper	Exec Comp	Write Result
LD	F6	34+ R2	1	2	3	4
LD	F2	45+ R3	5	6	7	8
MULTD	F0	F2 F4	6	9		
SUBD	F8	F6 F2	7	9	11	12
DIVD	F10	F0 F6	8			
ADDD	F6	F8 F2	13	14	16	

Functional unit status:

Time	Name	Busy	Op	dest Fi	S1 Fj	S2 Fk	FU Qj	FU Qk	Fj? Rj	Fk? Rk
	Integer	No								
3	Mult1	Yes	Mult	F0	F2	F4			No	No
	Mult2	No								
0	Add	Yes	Add	F6	F8	F2			No	No
	Divide	Yes	Div	F10	F0	F6	Mult1		No	Yes

Register result status:

Clock		F0	F2	F4	F6	F8	F10	F12	...	F30
16	FU	Mult1			Add		Divide			

Scoreboard Example: Cycle 17

Instruction status:

Instruction	j	k	Issue	Read Oper	Exec Comp	Write Result
LD	F6	34+ R2	1	2	3	4
LD	F2	45+ R3	5	6	7	8
MULTD	F0	F2 F4	6	9		
SUBD	F8	F6 F2	7	9	11	12
DIVD	F10	F0 F6	8			
ADDD	F6	F8 F2	13	14	16	

WAR Hazard!

Functional unit status:

Time	Name	Busy	Op	dest Fi	S1 Fj	S2 Fk	FU Qj	FU Qk	Fj? Rj	Fk? Rk
	Integer	No								
2	Mult1	Yes	Mult	F0	F2	F4			No	No
	Mult2	No								
	Add	Yes	Add	F6	F8	F2			No	No
	Divide	Yes	Div	F10	F0	F6	Mult1		No	Yes

Register result status:

Clock		F0	F2	F4	F6	F8	F10	F12	...	F30
17	FU	Mult1			Add		Divide			

- **Why not write result of ADD???**

Scoreboard Example: Cycle 18

Instruction status:

Instruction	j	k	Issue	Read Oper	Exec Comp	Write Result
LD	F6	34+ R2	1	2	3	4
LD	F2	45+ R3	5	6	7	8
MULTD	F0	F2 F4	6	9		
SUBD	F8	F6 F2	7	9	11	12
DIVD	F10	F0 F6	8			
ADDD	F6	F8 F2	13	14	16	

Functional unit status:

Time	Name	Busy	Op	dest Fi	S1 Fj	S2 Fk	FU Qj	FU Qk	Fj? Rj	Fk? Rk
	Integer	No								
1	Mult1	Yes	Mult	F0	F2	F4			No	No
	Mult2	No								
	Add	Yes	Add	F6	F8	F2			No	No
	Divide	Yes	Div	F10	F0	F6	Mult1		No	Yes

Register result status:

Clock		F0	F2	F4	F6	F8	F10	F12	...	F30
18	FU	Mult1			Add		Divide			

Scoreboard Example: Cycle 19

Instruction status:

Instruction		j	k	Issue	Read Oper	Exec Comp	Write Result
LD	F6	34+	R2	1	2	3	4
LD	F2	45+	R3	5	6	7	8
MULTD	F0	F2	F4	6	9	19	
SUBD	F8	F6	F2	7	9	11	12
DIVD	F10	F0	F6	8			
ADDD	F6	F8	F2	13	14	16	

Functional unit status:

Time	Name	Busy	Op	dest Fi	S1 Fj	S2 Fk	FU Qj	FU Qk	Fj? Rj	Fk? Rk
	Integer	No								
0	Mult1	Yes	Mult	F0	F2	F4			No	No
	Mult2	No								
	Add	Yes	Add	F6	F8	F2			No	No
	Divide	Yes	Div	F10	F0	F6	Mult1		No	Yes

Register result status:

Clock		F0	F2	F4	F6	F8	F10	F12	...	F30
19	FU	Mult1			Add		Divide			

Scoreboard Example: Cycle 20

Instruction status:

Instruction		j	k	Issue	Read Oper	Exec Comp	Write Result
LD	F6	34+	R2	1	2	3	4
LD	F2	45+	R3	5	6	7	8
MULTD	F0	F2	F4	6	9	19	20
SUBD	F8	F6	F2	7	9	11	12
DIVD	F10	F0	F6	8			
ADDD	F6	F8	F2	13	14	16	

Functional unit status:

Time	Name	Busy	Op	dest Fi	S1 Fj	S2 Fk	FU Qj	FU Qk	Fj? Rj	Fk? Rk
	Integer	No								
	Mult1	No								
	Mult2	No								
	Add	Yes	Add	F6	F8	F2			No	No
	Divide	Yes	Div	F10	F0	F6			Yes	Yes

Register result status:

Clock		F0	F2	F4	F6	F8	F10	F12	...	F30
20	FU				Add		Divide			

Scoreboard Example: Cycle 21

Instruction status:

Instruction		j	k	Issue	Read Oper	Exec Comp	Write Result
LD	F6	34+	R2	1	2	3	4
LD	F2	45+	R3	5	6	7	8
MULTD	F0	F2	F4	6	9	19	20
SUBD	F8	F6	F2	7	9	11	12
DIVD	F10	F0	F6	8	21		
ADDD	F6	F8	F2	13	14	16	

Functional unit status:

Time	Name	Busy	Op	dest Fi	S1 Fj	S2 Fk	FU Qj	FU Qk	Fj? Rj	Fk? Rk
	Integer	No								
	Mult1	No								
	Mult2	No								
	Add	Yes	Add	F6	F8	F2			No	No
	Divide	Yes	Div	F10	F0	F6			Yes	Yes

Register result status:

Clock		F0	F2	F4	F6	F8	F10	F12	...	F30
21	FU				Add		Divide			

- **WAR Hazard is now gone...**

Scoreboard Example: Cycle 22

Instruction status:

Instruction		j	k	Issue	Read Oper	Exec Comp	Write Result
LD	F6	34+	R2	1	2	3	4
LD	F2	45+	R3	5	6	7	8
MULTD	F0	F2	F4	6	9	19	20
SUBD	F8	F6	F2	7	9	11	12
DIVD	F10	F0	F6	8	21		
ADDD	F6	F8	F2	13	14	16	22

Functional unit status:

Time	Name	Busy	Op	dest Fi	S1 Fj	S2 Fk	FU Qj	FU Qk	Fj? Rj	Fk? Rk
	Integer	No								
	Mult1	No								
	Mult2	No								
	Add	No								
39	Divide	Yes	Div	F10	F0	F6			No	No

Register result status:

Clock		F0	F2	F4	F6	F8	F10	F12	...	F30
22	FU						Divide			

Scoreboard Example: Cycle 61

Instruction status:

Instruction		j	k	Issue	Read Oper	Exec Comp	Write Result
LD	F6	34+	R2	1	2	3	4
LD	F2	45+	R3	5	6	7	8
MULTD	F0	F2	F4	6	9	19	20
SUBD	F8	F6	F2	7	9	11	12
DIVD	F10	F0	F6	8	21	61	
ADDD	F6	F8	F2	13	14	16	22

Functional unit status:

Time	Name	Busy	Op	dest Fi	S1 Fj	S2 Fk	FU Qj	FU Qk	Fj? Rj	Fk? Rk
	Integer	No								
	Mult1	No								
	Mult2	No								
	Add	No								
0	Divide	Yes	Div	F10	F0	F6			No	No

Register result status:

Clock		F0	F2	F4	F6	F8	F10	F12	...	F30
61	FU						Divide			

Scoreboard Example: Cycle 62

Instruction status:

Instruction		j	k	Issue	Read Oper	Exec Comp	Write Result
LD	F6	34+	R2	1	2	3	4
LD	F2	45+	R3	5	6	7	8
MULTD	F0	F2	F4	6	9	19	20
SUBD	F8	F6	F2	7	9	11	12
DIVD	F10	F0	F6	8	21	61	62
ADDD	F6	F8	F2	13	14	16	22

Functional unit status:

Time	Name	Busy	Op	dest Fi	S1 Fj	S2 Fk	FU Qj	FU Qk	Fj? Rj	Fk? Rk
	Integer	No								
	Mult1	No								
	Mult2	No								
	Add	No								
	Divide	No								

Register result status:

Clock		F0	F2	F4	F6	F8	F10	F12	...	F30
62	FU									

Review: Scoreboard Example: Cycle 62

Instruction status:

Instruction		j	k	Issue	Read Oper	Exec Comp	Write Result
LD	F6	34+	R2	1	2	3	4
LD	F2	45+	R3	5	6	7	8
MULTD	F0	F2	F4	6	9	19	20
SUBD	F8	F6	F2	7	9	11	12
DIVD	F10	F0	F6	8	21	61	62
ADDD	F6	F8	F2	13	14	16	22

Functional unit status:

Time	Name	Busy	Op	dest Fi	S1 Fj	S2 Fk	FU Qj	FU Qk	Fj? Rj	Fk? Rk
	Integer	No								
	Mult1	No								
	Mult2	No								
	Add	No								
	Divide	No								

Register result status:

Clock		F0	F2	F4	F6	F8	F10	F12	...	F30
62	FU									

- **In-order issue; out-of-order execute & commit**

CDC 6600 Scoreboard

- **Speedup 1.7 from compiler; 2.5 by hand BUT slow memory (no cache) limits benefit**
- **Limitations of 6600 scoreboard:**
  - **No forwarding hardware**
  - **Limited to instructions in basic block (small *window*)**
  - **Small number of functional units (structural hazards), especially integer/load store units**
  - **Do not issue on structural hazards**
  - **Wait for WAR hazards**
  - **Prevent WAW hazards**

CS 152 Administrivia

- Today is last day for TeleBears.
- Get your photo taken by Aaron!
- Textbook Reading for Lectures 6 to 8
  - Computer Architecture: A Quantitative Approach, Chapter 4, Appendix B
- Exercises for Lectures 3 to 8
  - Due Friday Sept 17 at 5PM homework box in 283 Soda (building is locked at 6:45 PM)
  - 4.2, 4.10, 4.19
  - 4.14 parts c) and d) only
  - B.2
  - Done in pairs, but both need to understand whole assignment
  - Study groups encouraged, but pairs do own work

Another Dynamic Algorithm: Tomasulo Algorithm

- For IBM 360/91 about 3 years after CDC 6600 (1966)
- Goal: High Performance without special compilers
- Differences between IBM 360 & CDC 6600 ISA
  - IBM has only 2 register specifiers/instr vs. 3 in CDC 6600
  - IBM has 4 FP registers vs. 8 in CDC 6600
  - IBM has memory-register ops
- Why Study? lead to Alpha 21264, HP 8000, MIPS 10000, Pentium II, PowerPC 604, …

Tomasulo Algorithm vs. Scoreboard

- Control & buffers distributed with Function Units (FU) vs. centralized in scoreboard;
  - FU buffers called "reservation stations"; have pending operands
- Registers in instructions replaced by values or pointers to reservation stations(RS); called register renaming ;
  - avoids WAR, WAW hazards
  - More reservation stations than registers, so can do optimizations compilers can't
- Results to FU from RS, not through registers, over Common Data Bus that broadcasts results to all FUs
- Load and Stores treated as FUs with RSs as well
- Integer instructions can go past branches, allowing FP ops beyond basic block in FP queue

Tomasulo Organization

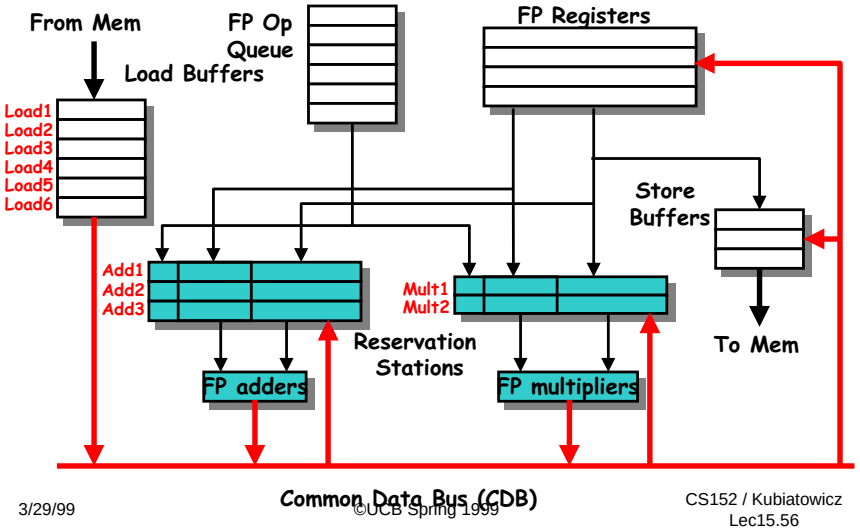

Reservation Station Components

Op: Operation to perform in the unit (e.g., + or –)

Vj, Vk: **Value** of Source operands

- Store buffers has V field, result to be stored

Qj, Qk: Reservation stations producing source registers (value to be written)

- Note: No ready flags as in Scoreboard; Qj,Qk=0 => ready
- Store buffers only have Qi for RS producing result

Busy: Indicates reservation station or FU is busy

Register result status—Indicates which functional unit will write each register, if one exists. Blank when no pending instructions that will write that register.

Three Stages of Tomasulo Algorithm

1. **Issue**—get instruction from FP Op Queue
   If reservation station free (no structural hazard), control issues instr & sends operands (renames registers).
2. **Execution**—operate on operands (EX)
   When both operands ready then execute; if not ready, watch Common Data Bus for result
3. **Write result**—finish execution (WB)
   Write on Common Data Bus to all awaiting units; mark reservation station available

- Normal data bus: data + destination ("go to" bus)
- Common data bus: data + source ("come from" bus)
  - 64 bits of data + 4 bits of Functional Unit source address
  - Write if matches expected Functional Unit (produces result)
  - Does the broadcast

Tomasulo Example

Instruction status:

Instruction	j	k	Issue	Exec Comp	Write Result
LD	F6	34+	R2		
LD	F2	45+	R3		
MULTD	F0	F2	F4		
SUBD	F8	F6	F2		
DIVD	F10	F0	F6		
ADDD	F6	F8	F2		

	Busy	Address
Load1	No	
Load2	No	
Load3	No	

Reservation Stations:

Time	Name	Busy	Op	S1 Vj	S2 Vk	RS Qj	RS Qk
	Add1	No					
	Add2	No					
	Add3	No					
	Mult1	No					
	Mult2	No					

Register result status:

Clock		F0	F2	F4	F6	F8	F10	F12	...	F30
0	FU									

Tomasulo Example Cycle 1

Instruction status:

Instruction	j	k	Issue	Exec Comp	Write Result
LD	F6	34+	R2	1	
LD	F2	45+	R3		
MULTD	F0	F2	F4		
SUBD	F8	F6	F2		
DIVD	F10	F0	F6		
ADDD	F6	F8	F2		

	Busy	Address
Load1	Yes	34+R2
Load2	No	
Load3	No	

Reservation Stations:

Time	Name	Busy	Op	S1 Vj	S2 Vk	RS Qj	RS Qk
	Add1	No					
	Add2	No					
	Add3	No					
	Mult1	No					
	Mult2	No					

Register result status:

Clock		F0	F2	F4	F6	F8	F10	F12	...	F30
1	FU				Load1					

Tomasulo Example Cycle 2

Instruction status:

Instruction	j	k	Issue	Exec Comp	Write Result
LD	F6	34+	R2	1	
LD	F2	45+	R3	2	
MULTD	F0	F2	F4		
SUBD	F8	F6	F2		
DIVD	F10	F0	F6		
ADDD	F6	F8	F2		

	Busy	Address
Load1	Yes	34+R2
Load2	Yes	45+R3
Load3	No	

Reservation Stations:

Time	Name	Busy	Op	S1 Vj	S2 Vk	RS Qj	RS Qk
	Add1	No					
	Add2	No					
	Add3	No					
	Mult1	No					
	Mult2	No					

Register result status:

Clock		F0	F2	F4	F6	F8	F10	F12	...	F30
2	FU		Load2		Load1					

Note: Unlike 6600, can have multiple loads outstanding

Tomasulo Example Cycle 3

Instruction status:

Instruction	j	k	Issue	Exec Comp	Write Result
LD	F6	34+	R2	1	3
LD	F2	45+	R3	2	
MULTD	F0	F2	F4	3	
SUBD	F8	F6	F2		
DIVD	F10	F0	F6		
ADDD	F6	F8	F2		

	Busy	Address
Load1	Yes	34+R2
Load2	Yes	45+R3
Load3	No	

Reservation Stations:

Time	Name	Busy	Op	S1 Vj	S2 Vk	RS Qj	RS Qk
	Add1	No					
	Add2	No					
	Add3	No					
	Mult1	Yes	MULTD		R(F4)	Load2	
	Mult2	No					

Register result status:

Clock		F0	F2	F4	F6	F8	F10	F12	...	F30
3	FU	Mult1	Load2		Load1					

- **Note: registers names are removed ("renamed") in Reservation Stations; MULT issued vs. scoreboard**
- **Load1 completing; what is waiting for Load1?**

Tomasulo Example Cycle 4

Instruction status:

Instruction	j	k	Issue	Exec Comp	Write Result
LD	F6	34+	R2	1	3	4
LD	F2	45+	R3	2	4	
MULTD	F0	F2	F4	3		
SUBD	F8	F6	F2	4		
DIVD	F10	F0	F6			
ADDD	F6	F8	F2			

	Busy	Address
Load1	No	
Load2	Yes	45+R3
Load3	No	

Reservation Stations:

Time	Name	Busy	Op	S1 Vj	S2 Vk	RS Qj	RS Qk
	Add1	Yes	SUBD	M(A1)			Load2
	Add2	No					
	Add3	No					
	Mult1	Yes	MULTD		R(F4)	Load2	
	Mult2	No					

Register result status:

Clock		F0	F2	F4	F6	F8	F10	F12	...	F30
4	FU	Mult1	Load2		M(A1)	Add1				

- **Load2 completing; what is waiting for Load1?**

Tomasulo Example Cycle 5

Instruction status:

Instruction	j	k	Issue	Exec Comp	Write Result
LD	F6	34+	R2	1	3	4
LD	F2	45+	R3	2	4	5
MULTD	F0	F2	F4	3		
SUBD	F8	F6	F2	4		
DIVD	F10	F0	F6	5		
ADDD	F6	F8	F2			

	Busy	Address
Load1	No	
Load2	No	
Load3	No	

Reservation Stations:

Time	Name	Busy	Op	S1 Vj	S2 Vk	RS Qj	RS Qk
2	Add1	Yes	SUBD	M(A1)	M(A2)		
	Add2	No					
	Add3	No					
10	Mult1	Yes	MULTD	M(A2)	R(F4)		
	Mult2	Yes	DIVD		M(A1)	Mult1	

Register result status:

Clock		F0	F2	F4	F6	F8	F10	F12	...	F30
5	FU	Mult1	M(A2)		M(A1)	Add1	Mult2			

Tomasulo Example Cycle 6

Instruction status:

Instruction	j	k	Issue	Exec Comp	Write Result
LD	F6	34+	R2	1	3	4
LD	F2	45+	R3	2	4	5
MULTD	F0	F2	F4	3		
SUBD	F8	F6	F2	4		
DIVD	F10	F0	F6	5		
ADDD	F6	F8	F2	6		

	Busy	Address
Load1	No	
Load2	No	
Load3	No	

Reservation Stations:

Time	Name	Busy	Op	S1 Vj	S2 Vk	RS Qj	RS Qk
1	Add1	Yes	SUBD	M(A1)	M(A2)		
	Add2	Yes	ADDD		M(A2)	Add1	
	Add3	No					
9	Mult1	Yes	MULTD	M(A2)	R(F4)		
	Mult2	Yes	DIVD		M(A1)	Mult1	

Register result status:

Clock		F0	F2	F4	F6	F8	F10	F12	...	F30
6	FU	Mult1	M(A2)		Add2	Add1	Mult2			

- **Issue ADDD here vs. scoreboard?**

Tomasulo Example Cycle 7

Instruction status:

Instruction	j	k	Issue	Exec Comp	Write Result
LD	F6	34+	R2	1	3	4
LD	F2	45+	R3	2	4	5
MULTD	F0	F2	F4	3		
SUBD	F8	F6	F2	4	7	
DIVD	F10	F0	F6	5		
ADDD	F6	F8	F2	6		

	Busy	Address
Load1	No	
Load2	No	
Load3	No	

Reservation Stations:

Time	Name	Busy	Op	S1 Vj	S2 Vk	RS Qj	RS Qk
0	Add1	Yes	SUBD	M(A1)	M(A2)		
	Add2	Yes	ADDD		M(A2)	Add1	
	Add3	No					
8	Mult1	Yes	MULTD	M(A2)	R(F4)		
	Mult2	Yes	DIVD		M(A1)	Mult1	

Register result status:

Clock		F0	F2	F4	F6	F8	F10	F12	...	F30
7	FU	Mult1	M(A2)		Add2	Add1	Mult2			

- **Add1 completing; what is waiting for it?**

Tomasulo Example Cycle 8

Instruction status:

Instruction	j	k	Issue	Exec Comp	Write Result
LD	F6	34+	R2	1	3	4
LD	F2	45+	R3	2	4	5
MULTD	F0	F2	F4	3		
SUBD	F8	F6	F2	4	7	8
DIVD	F10	F0	F6	5		
ADDD	F6	F8	F2	6		

	Busy	Address
Load1	No	
Load2	No	
Load3	No	

Reservation Stations:

Time	Name	Busy	Op	S1 Vj	S2 Vk	RS Qj	RS Qk
	Add1	No					
2	Add2	Yes	ADDD	(M-M)	M(A2)		
	Add3	No					
7	Mult1	Yes	MULTD	M(A2)	R(F4)		
	Mult2	Yes	DIVD		M(A1)	Mult1	

Register result status:

Clock		F0	F2	F4	F6	F8	F10	F12	...	F30
8	FU	Mult1	M(A2)		Add2	(M-M)	Mult2			

Tomasulo Example Cycle 9

Instruction status:

Instruction	j	k	Issue	Exec Comp	Write Result
LD	F6	34+	R2	1	3	4
LD	F2	45+	R3	2	4	5
MULTD	F0	F2	F4	3		
SUBD	F8	F6	F2	4	7	8
DIVD	F10	F0	F6	5		
ADDD	F6	F8	F2	6		

	Busy	Address
Load1	No	
Load2	No	
Load3	No	

Reservation Stations:

Time	Name	Busy	Op	S1 Vj	S2 Vk	RS Qj	RS Qk
	Add1	No					
1	Add2	Yes	ADDD	(M-M)	M(A2)		
	Add3	No					
6	Mult1	Yes	MULTD	M(A2)	R(F4)		
	Mult2	Yes	DIVD		M(A1)	Mult1	

Register result status:

Clock		F0	F2	F4	F6	F8	F10	F12	...	F30
9	FU	Mult1	M(A2)		Add2	(M-M)	Mult2			

Tomasulo Example Cycle 10

Instruction status:

Instruction	j	k	Issue	Exec Comp	Write Result
LD	F6	34+	R2	1	3	4
LD	F2	45+	R3	2	4	5
MULTD	F0	F2	F4	3		
SUBD	F8	F6	F2	4	7	8
DIVD	F10	F0	F6	5		
ADDD	F6	F8	F2	6	10	

	Busy	Address
Load1	No	
Load2	No	
Load3	No	

Reservation Stations:

Time	Name	Busy	Op	S1 Vj	S2 Vk	RS Qj	RS Qk
	Add1	No					
0	Add2	Yes	ADDD	(M-M)	M(A2)		
	Add3	No					
5	Mult1	Yes	MULTD	M(A2)	R(F4)		
	Mult2	Yes	DIVD		M(A1)	Mult1	

Register result status:

Clock		F0	F2	F4	F6	F8	F10	F12	...	F30
10	FU	Mult1	M(A2)		Add2	(M-M)	Mult2			

- **Add2 completing; what is waiting for it?**

Tomasulo Example Cycle 11

Instruction status:

Instruction	j	k	Issue	Exec Comp	Write Result
LD	F6	34+	R2	1	3	4
LD	F2	45+	R3	2	4	5
MULTD	F0	F2	F4	3		
SUBD	F8	F6	F2	4	7	8
DIVD	F10	F0	F6	5		
ADDD	F6	F8	F2	6	10	11

	Busy	Address
Load1	No	
Load2	No	
Load3	No	

Reservation Stations:

Time	Name	Busy	Op	S1 Vj	S2 Vk	RS Qj	RS Qk
	Add1	No					
	Add2	No					
	Add3	No					
4	Mult1	Yes	MULTD	M(A2)	R(F4)		
	Mult2	Yes	DIVD		M(A1)	Mult1	

Register result status:

Clock		F0	F2	F4	F6	F8	F10	F12	...	F30
11	FU	Mult1	M(A2)		(M-M+N	(M-M)	Mult2			

- **Write result of ADDD here vs. scoreboard?**
- **All quick instructions complete in this cycle!**

Tomasulo Example Cycle 12

Instruction status:

Instruction	j	k	Issue	Exec Comp	Write Result
LD	F6	34+	R2	1	3	4
LD	F2	45+	R3	2	4	5
MULTD	F0	F2	F4	3		
SUBD	F8	F6	F2	4	7	8
DIVD	F10	F0	F6	5		
ADDD	F6	F8	F2	6	10	11

	Busy	Address
Load1	No	
Load2	No	
Load3	No	

Reservation Stations:

Time	Name	Busy	Op	S1 Vj	S2 Vk	RS Qj	RS Qk
	Add1	No					
	Add2	No					
	Add3	No					
3	Mult1	Yes	MULTD	M(A2)	R(F4)		
	Mult2	Yes	DIVD		M(A1)	Mult1	

Register result status:

Clock		F0	F2	F4	F6	F8	F10	F12	...	F30
12	FU	Mult1	M(A2)		(M-M+N	(M-M)	Mult2			

Tomasulo Example Cycle 13

Instruction status:

Instruction	j	k	Issue	Exec Comp	Write Result
LD	F6	34+	R2	1	3	4
LD	F2	45+	R3	2	4	5
MULTD	F0	F2	F4	3		
SUBD	F8	F6	F2	4	7	8
DIVD	F10	F0	F6	5		
ADDD	F6	F8	F2	6	10	11

	Busy	Address
Load1	No	
Load2	No	
Load3	No	

Reservation Stations:

Time	Name	Busy	Op	S1 Vj	S2 Vk	RS Qj	RS Qk
	Add1	No					
	Add2	No					
	Add3	No					
2	Mult1	Yes	MULTD	M(A2)	R(F4)		
	Mult2	Yes	DIVD		M(A1)	Mult1	

Register result status:

Clock		F0	F2	F4	F6	F8	F10	F12	...	F30
13	FU	Mult1	M(A2)		(M-M+N	(M-M)	Mult2			

Tomasulo Example Cycle 14

Instruction status:

Instruction	j	k	Issue	Exec Comp	Write Result
LD	F6	34+	R2	1	3	4
LD	F2	45+	R3	2	4	5
MULTD	F0	F2	F4	3		
SUBD	F8	F6	F2	4	7	8
DIVD	F10	F0	F6	5		
ADDD	F6	F8	F2	6	10	11

	Busy	Address
Load1	No	
Load2	No	
Load3	No	

Reservation Stations:

Time	Name	Busy	Op	S1 Vj	S2 Vk	RS Qj	RS Qk
	Add1	No					
	Add2	No					
	Add3	No					
1	Mult1	Yes	MULTD	M(A2)	R(F4)		
	Mult2	Yes	DIVD		M(A1)	Mult1	

Register result status:

Clock		F0	F2	F4	F6	F8	F10	F12	...	F30
14	FU	Mult1	M(A2)		(M-M+N	(M-M)	Mult2			

Tomasulo Example Cycle 15

Instruction status:

Instruction	j	k	Issue	Exec Comp	Write Result
LD	F6	34+	R2	1	3	4
LD	F2	45+	R3	2	4	5
MULTD	F0	F2	F4	3	15	
SUBD	F8	F6	F2	4	7	8
DIVD	F10	F0	F6	5		
ADDD	F6	F8	F2	6	10	11

	Busy	Address
Load1	No	
Load2	No	
Load3	No	

Reservation Stations:

Time	Name	Busy	Op	S1 Vj	S2 Vk	RS Qj	RS Qk
	Add1	No					
	Add2	No					
	Add3	No					
0	Mult1	Yes	MULTD	M(A2)	R(F4)		
	Mult2	Yes	DIVD		M(A1)	Mult1	

Register result status:

Clock		F0	F2	F4	F6	F8	F10	F12	...	F30
15	FU	Mult1	M(A2)		(M-M+N	(M-M)	Mult2			

Tomasulo Example Cycle 16

Instruction status:

Instruction	j	k	Issue	Exec Comp	Write Result
LD	F6	34+	R2	1	3	4
LD	F2	45+	R3	2	4	5
MULTD	F0	F2	F4	3	15	16
SUBD	F8	F6	F2	4	7	8
DIVD	F10	F0	F6	5		
ADDD	F6	F8	F2	6	10	11

	Busy	Address
Load1	No	
Load2	No	
Load3	No	

Reservation Stations:

Time	Name	Busy	Op	S1 Vj	S2 Vk	RS Qj	RS Qk
	Add1	No					
	Add2	No					
	Add3	No					
	Mult1	No					
40	Mult2	Yes	DIVD	M*F4	M(A1)		

Register result status:

Clock		F0	F2	F4	F6	F8	F10	F12	...	F30
16	FU	M*F4	M(A2)		(M-M+N	(M-M)	Mult2			

Faster than light computation (skip a couple of cycles)

Tomasulo Example Cycle 55

Instruction status:

Instruction	j	k	Issue	Exec Comp	Write Result
LD	F6	34+	R2	1	3	4
LD	F2	45+	R3	2	4	5
MULTD	F0	F2	F4	3	15	16
SUBD	F8	F6	F2	4	7	8
DIVD	F10	F0	F6	5		
ADDD	F6	F8	F2	6	10	11

	Busy	Address
Load1	No	
Load2	No	
Load3	No	

Reservation Stations:

Time	Name	Busy	Op	S1 Vj	S2 Vk	RS Qj	RS Qk
	Add1	No					
	Add2	No					
	Add3	No					
	Mult1	No					
1	Mult2	Yes	DIVD	M*F4	M(A1)		

Register result status:

Clock		F0	F2	F4	F6	F8	F10	F12	...	F30
55	FU	M*F4	M(A2)		(M-M+N	(M-M)	Mult2			

Tomasulo Example Cycle 56

Instruction status:

Instruction	j	k	Issue	Exec Comp	Write Result
LD	F6	34+	R2	1	3	4
LD	F2	45+	R3	2	4	5
MULTD	F0	F2	F4	3	15	16
SUBD	F8	F6	F2	4	7	8
DIVD	F10	F0	F6	5	56	
ADDD	F6	F8	F2	6	10	11

	Busy	Address
Load1	No	
Load2	No	
Load3	No	

Reservation Stations:

Time	Name	Busy	Op	S1 Vj	S2 Vk	RS Qj	RS Qk
	Add1	No					
	Add2	No					
	Add3	No					
	Mult1	No					
0	Mult2	Yes	DIVD	M*F4	M(A1)		

Register result status:

Clock		F0	F2	F4	F6	F8	F10	F12	...	F30
56	FU	M*F4	M(A2)		(M-M+N	(M-M)	Mult2			

- **Mult2 is completing; what is waiting for it?**

Tomasulo Example Cycle 57

Instruction status:

Instruction	j	k	Issue	Exec Comp	Write Result
LD	F6	34+	R2	1	3	4
LD	F2	45+	R3	2	4	5
MULTD	F0	F2	F4	3	15	16
SUBD	F8	F6	F2	4	7	8
DIVD	F10	F0	F6	5	56	57
ADDD	F6	F8	F2	6	10	11

	Busy	Address
Load1	No	
Load2	No	
Load3	No	

Reservation Stations:

Time	Name	Busy	Op	S1 Vj	S2 Vk	RS Qj	RS Qk
	Add1	No					
	Add2	No					
	Add3	No					
	Mult1	No					
0	Mult2	Yes	DIVD	M*F4	M(A1)		

Register result status:

Clock		F0	F2	F4	F6	F8	F10	F12	...	F30
56	FU	M*F4	M(A2)		(M-M+N	(M-M)	Mult2			

- **Once again: In-order issue, out-of-order execution and completion.**

Compare to Scoreboard Cycle 62

Instruction status:

Instruction	j	k	Issue	Read Oper	Exec Comp	Write Result	Issue	Exec Comp	Write Result
LD	F6	34+	R2	1	2	3	4	1	3	4
LD	F2	45+	R3	5	6	7	8	2	4	5
MULTD	F0	F2	F4	6	9	19	20	3	15	16
SUBD	F8	F6	F2	7	9	11	12	4	7	8
DIVD	F10	F0	F6	8	21	61	62	5	56	57
ADDD	F6	F8	F2	13	14	16	22	6	10	11

- **Why take longer on scoreboard/6600?**
  - **Structural Hazards**
  - **Lack of forwarding**

Tomasulo v. Scoreboard (IBM 360/91 v. CDC 6600)

Pipelined Functional Units	Multiple Functional Units
(6 load, 3 store, 3 +, 2 x/÷)	(1 load/store, 1 + , 2 x, 1 ÷)
window size: " 14 instructions	" 5 instructions
No issue on structural hazard	same
WAR: renaming avoids	stall completion
WAW: renaming avoids	stall issue
Broadcast results from FU	Write/read registers
Control: reservation stations	central scoreboard

Tomasulo Drawbacks

- Complexity
  - delays of 360/91, MIPS 10000, IBM 620?
- Many associative stores (CDB) at high speed
- Performance limited by Common Data Bus
  - Multiple CDBs => more FU logic for parallel assoc stores

Summary #1

- HW exploiting ILP
  - Works when can't know dependence at compile time.
  - Code for one machine runs well on another
- Key idea of Scoreboard: Allow instructions behind stall to proceed (Decode => Issue instr & read operands)
  - Enables out-of-order execution => out-of-order completion
  - ID stage checked both for structural & data dependencies
  - Original version didn't handle forwarding.
  - No automatic register renaming

Summary #2

- Reservations stations: renaming to larger set of registers + buffering source operands
  - Prevents registers as bottleneck
  - Avoids WAR, WAW hazards of Scoreboard
  - Allows loop unrolling in HW
- Not limited to basic blocks (integer units gets ahead, beyond branches)
- Helps cache misses as well
- Lasting Contributions
  - Dynamic scheduling
  - Register renaming
  - Load/store disambiguation
- 360/91 descendants are Pentium II; PowerPC 604; MIPS R10000; HP-PA 8000; Alpha 21264